STATE OF TENNESSEE
DEPARTMENT OF CORRECTION
FACILITIES PLANNING & CONSTRUCTION
GROUND FLOOR RACHEL JACKSON BLDG.
320 SIXTH AVENUE NORTH
NASHVILLE, TENNESSEE 37243-0465
TELEPHONE (615) 253-8228

SPECIFICATIONS

04/27/15

For the Project Titled:

Tullahoma Correctional Academy
Cooper North Stair Replacement

Designer

Department of Correction
Facilities Planning and Construction
Ronald J. Laflamme Staff Architect
License Number 103486

TABLE OF CONTENTS

Scope of Services…….……...00 00 20

Detention Project Procedures…….……..……..01 35 13.32

Metal Stairs……..……05 51 10

Slip Resistant Stair Treads…….……..05 51 19

Paint and Coatings……...…09 90 00

00 00 20

1) Scope of Service
   a) This project is a renovation project which will largely be completed under the supervision of Garry Crownover, Facility Manager at Tennessee Correction Academy (TCA) 931-461-7100 ext. 1900. Also the designer, Ronald LaFlamme, from TDOC Facilities Planning and Construction will provide inspections and input to the extent necessary to assure success. The primary objective is to demolish one exterior stair and salvage the roof on the Cooper dormatory building. The stairway will then be rebuilt to match existing construction per the plans dated 4/27/15. The Stairs shall be painted black. The treads shall be galvanized steel bolted in place. The railing and roof shall be painted white.
   b) The job site is located at the Tennessee Correction Academy in Tullahoma, TN. The contact person at the site for the project will be Garry L. Crownover at 931-461-7100 ext. 1900 and all visitors must coordinate with him prior to visiting the site. All bidders will be permitted to visit the job site prior to bidding in order to verify existing conditions at the Cooper Dormitory. After the contract is awarded the selected Contractor will then be required to field verify all measurements and exact existing conditions and local site requirements minimum 10 days prior to commencing construction. Any conflicts between the field conditions and the plans and specifications must be immediately brought to the Designer's attention at that time. A schedule will also be required to be submitted at that time to Mr. Crownover indicating proposed work days and times as well as job duration. Post information and inform occupants each week as to the status and schedule for the work.
   c) During the course of the work the contractor shall maintain a clean work area. Upon completion of the job at each building the contractor will clean the areas and remove all debris and trash from finished work site. All work must be done in a clean safe professional workman like manner.

SECTION 01 35 13.32

DETENTION PROJECT PROCEDURES

For Work At Non-Institutional Areas

PART 1 - GENERAL

1.01 SECTION INCLUDES:

General administrative, security procedural requirements and restrictions for Contractors regarding access to and use of the Tennessee Department of Correction property and surrounding areas; and security procedures for contractor tools, materials, and individuals for projects that do not require access to operating institutional properties or have only limited impact on institutional operations.

1.02 DEFINITIONS:

A. Owner – State of Tennessee Department of General Services for the Department of Correction.

B. State of Emergency – Event or condition impacting the security of the facility or safety of staff, inmates or contractors.

C. TDOC – Tennessee Department of Correction.

1.03 SUPERVISION:

A. Contractor shall provide on-site supervision of construction personnel at all times.

B. Contractor shall at all times have a minimum of one person at each separate work site or work crew capable of communication in English with the TDOC staff.

1.04 PROJECT/SITE CONDITIONS/REQUIREMENTS:

A. Prior to mobilization of construction personnel to the site, Contractor shall ensure that personnel, sub-contractors, material suppliers, etc. review the requirements of this Section.

B. The Contractor shall require that all personnel, sub-contractors, material suppliers, etc. who will enter TDOC property certify their awareness of and familiarity with the requirements of this Section during orientation to the institution.

C. The Director of Facilities, Planning & Construction (FPC) is the chief administrator of the project site. The Director of FPC has full and final supervision over all site operations and the Contractor usage of the site. The Director of FPC may delegate certain responsibilities held, as presented in this Section, to one or more designees identified by the Director of FPC.

D. The Director of FPC/designee may provide the Contractor's Superintendent with an institutional radio for communication. Superintendent shall turn in radio to designated staff upon leaving the premises each day.

E. The Contractor shall provide to the Director of FPC primary and alternate emergency contact information of individuals (Superintendent and/or foreman) to be notified during non-working hours if an event impacting the project has occurred which warrants their notification.

F. Security Procedures Orientation:

1. Each individual who enters the site on behalf of the Contractor, including but not limited to subcontractors and material suppliers may, at the Director of FPC's discretion, receive a Security Procedures Orientation for the project. The Director of FPC/designee will provide the orientation. Prior orientation in the course of another project cannot substitute for orientation for this project.
2. Contractor shall coordinate scheduling individuals for orientation.
3. Director of FPC will determine duration of the orientation and its agenda.
4. Contractor shall provide an interpreter, if required.

G. Contractor shall not request direction, project documents clarification, or approval from institution staff, security escorts or other on-site personnel. The Owner's Construction Representative is the Owner's designated on-site representative during construction and is the only party authorized to direct changes to the scope, cost or contract time of the project.

1.05 EMERGENCIES:

A. If the Director of FPC/designee declares a state of emergency, Contractor may be:

1. Required to leave premises.
2. Confined to a specific area for duration of emergency.

B. Emergencies that may impact access to the institution include, but not limited to:

1. Fog, inclement weather or natural disaster,
2. Food, medical, or transportation emergencies,
3. Disturbance, inmate work stoppage, inmate escape, inmate hunger strike or hostage situation, and
4. Bomb threat, chemical spill, fire, or institution evacuation.

C. At the Director of FPC's discretion and depending on the level of emergency, the Contractor may be permitted to work at the job-site trailer/staging area(s) or other institution areas outside the secure perimeter.

D. Any incident requiring police or ambulance service should be reported to the Director of FPC/designee immediately following the notification of emergency responders.

1.06 ACCESS TO SITE:

A. Access is normally restricted to the period from 7:00 AM to 7:00 PM every weekday during daylight hours only. The Director of FPC may vary these hours at his discretion. Contractor shall provide the Director of FPC a minimum of 48 hours notice before working on Saturdays, Sundays or State of Tennessee holidays. If the institution is officially closed due to an emergency condition or other State of Tennessee requirement, the Contractor will not be allowed to work.

B. The Director of FPC/designee will endeavor to notify the Contractor as soon as possible if a situation exists which may preclude timely access to or use of the project site.

1.07 SECURITY:

A. Security Escort (as applicable):

1. Normal Schedule – 7:00 AM to 7:00 PM during daylight hours as approved by the Director of FPC. The Director of FPC will establish a Construction Security Contact person to work with the Contractor and serve as security escort. This staff security officer will be provided for normal contractor work hours.

2. Normal Work Hours – Access to security escorts shall be provided during business work hours.

3. Extended Schedule – All extended hours requested by the Contractor may be approved by the Director of FPC on a case-by-case basis to extend work during hours of darkness or on weekends or holidays. The Contractor shall submit a written request to the Director of FPC or designee for use of these officers a minimum of 48 hours prior to their intended use.

4. The Contractor shall be responsible for the costs of a full time security escort in the following time increments in compliance with the following:

   a. The Contractor shall have a TDOC security escort present whenever there are employees, sub-contractors, vendors, etc. at the job site, no exceptions allowed.

   b. Payment(s) for the security escort shall be made directly to the work site institution (or as otherwise determined by the Director of FPC) by the Contractor on a monthly basis in the following block rates:

4 hours =	$95.00
8 hours =	$189.00
10 hours =	$237.00

   c. Payments shall be made monthly to the institution. Payments over 30-days past due shall incur interest per the contract General Conditions.

   d. Security escorts required for non-conforming contract corrective work will not be provided at no-cost to the Contractor. The Contractor shall be responsible for all escort costs in blocks of time as per 1.07.4.b above.

5. Contractor shall endeavor to notify the Director of FPC of non-workdays.

6. The correctional officer assigned as a security escort has specific TDOC responsibilities to include (but not limited to):

   a. Security of civilian workers;

   b. Periodic checks of tools and equipment introduced on to TDOC property;

   c. Monitoring the security of all vehicles and fuels;

   d. Separation of the inmate general population should workers require access to inmate work areas; and

   e. Maintaining communication with the Director of FPC and Central Control.

7. Security escorts shall not participate in construction activities, receive construction materials or remove construction materials, either demolished or surplused, from the project site. Specifically, this means that any services, parts, pieces, construction materials, supplies, or other goods purchased with State of Tennessee funds, whether directly or indirectly; whether removed from the project site or unused in the completion of the project, are to be disposed of in a manner acceptable to the State of Tennessee and SHALL NOT be diverted to the personal use of ANY persons whether they be a State Employee or not. Any such diversion of State purchased property or State funded services to personal use will be treated as theft in accordance with TCA 39-14-103 or TCA 39-14-104).

B. The Contractor shall restrict the access of all persons entering upon the Owner's property in connection with the Work to the agreed upon access route, procedures and to the actual site of the Work.

C. The Contractor shall restrict activities of employees to authorized areas. Contractor employees shall not enter other institution areas or buildings unless it is directly related to the Work of this project and under security escort if applicable.

D. The Director of FPC/designee may conduct random vehicle searches on all vehicles entering TDOC property. Institutions restrict prohibited items, i.e., weapons, drugs, alcohol, cell phones, tobacco products, etc. Vehicle searches may be conducted with the use of detection dogs. If weapons, drugs, ammunition, or alcohol are found in a construction worker's vehicle, the owner operator is subject to arrest by local authorities and may be restricted from return to TDOC property. Persons with valid handgun carry permits may have their weapon on the TDOC property provided the weapon(s) are securely stored and out of sight in the employee's vehicle.

E. Individuals, vehicles, and construction facilities are subject to search at discretion of the Director of FPC/designee. Searches of individuals may include strip search at the discretion of the Director of FPC.

F. The Contractor shall, at the direction of the Director of FPC/designee, be required to make available keys for any on-site job trailers, storage boxes, equipment containers, etc. The Director of FPC may require searches of these items or facilities at any time.

G. All institutional areas are subject to video and audio surveillance at the direction and discretion of the Director of FPC.

1.08 IDENTIFICATION OF CONTRACTOR'S PERSONNEL:

A. All personnel shall be subject to a fingerprint background check conducted by the Department prior to being permitted to enter the institution. If requested by the Director of FPC, the Contractor/employee shall complete a Contractor Pre-Access Questionnaire form completing all indicated background check information. Additionally the Contractor/employee will be available to the institution to be fingerprinted as scheduled by the institution. Background check forms provided by the Director of FPC must be completed prior to Contractor's mobilization to the site. Fingerprint background checks will be performed on employees, delivery drivers and vehicle operators employed by the Contractor, sub-contractors and vendors. Any consistent driver that frequents the project site will require a background check. Contractor should assume that background checks will take a minimum of 7 business days to complete. The Contractor shall notify the Director of FPC and complete the background check forms for all replacement and/or new employees, drivers, etc. not identified in the initial list of site personnel. Background checks may be repeated on any employee at any time. Any subsequent information, such as a recent arrest, may result in denial of access.

B. A valid driver's license number, social security number, date of birth and/or other similar information is required for a background check. Background information will not be disclosed to or discussed with the Contractor. Per applicable laws and TDOC policy, background information will remain confidential.

C. The Contractor shall identify for the Director of FPC, promptly upon their employ, persons who have been previously convicted of a felony, incarcerated, or who have a family member currently incarcerated in an institution managed by the Tennessee Department of Correction. Director of FPC may require such persons to be excluded from working on the premises.

D. Denial of access decisions by the Director of FPC will be final and non-negotiable.

E. The Contractor shall notify the Director of FPC immediately upon dismissal or arrest of an employee, but no later than 48-hours from the time the Contractor is informed. The Director of FPC shall determine whether the employee may continue to have access to institutional property.

F. An identification card (or pass) may be provided to each construction worker who enters the confines of the institution. Workers will be required to show a valid government issued photo identification card in order for a card to be issued. Identification cards shall be worn in plain sight at all times. If lost or stolen, report to the Director of FPC/designee for issuance of a new card. Identification cards shall be returned to the Director of FPC/designee upon completion of work or termination of employment. The cost of replacement cards/ID shall be the Contractor's responsibility.

G. Construction Worker Apparel:

1. Construction workers may be required to wear appropriate identification and clothing at correctional facilities, which may consist of or be limited by:
   a. Headwear of a specific color.
   b. Shirt and/or vest of a specific color.
   c. Other appropriate apparel as designated by the Director of FPC/designee.
   d. The use or wearing of camouflaged clothing is subject to approval by the Director of FPC.

2. Apparel depicting gang colors or symbols, contraband or inappropriate activity is not permitted. (An example would be a shirt or hat advertising beer or drug paraphernalia, etc.)

1.09 JOB CONDITIONS:

A. Items that are not required for performance of work are not permitted. All unnecessary items must be removed from vehicles so that searches may proceed quickly.

B. Association with inmates:

1. Interaction with inmates is not permitted.

2. Trafficing or trading in goods with inmates is not permitted.

3. The Department of Correction adheres to a policy of Zero Tolerance regarding workplace relationships with inmates; see TN Code Annotated 41-21-241.

C. Tobacco Products, Alcoholic Beverages, Cell Phones, Weapons and Drugs:

1. All areas within the TDOC property are designated as NO SMOKING/TOBACCO FREE areas. The Contractor shall not allow any workers to use or to have in their possession tobacco products or tobacco related paraphernalia on TDOC property. All tobacco related items must remain locked in the workers vehicle while on TDOC property.

2. Alcoholic beverages, non-permitted weapons, and illegal drugs are not allowed on TDOC property. Persons caught introducing illegal or banned items onto the grounds of a TDOC institution are subject to confiscation of the disallowed items, removal from the site, termination of site access privileges and prosecution.

3. Individuals requiring prescription medications during the workday will be required to carry the medication in the original packaging from the pharmacy with the prescription name and dosage (see TCA 39-16-201) and fill out a form, suitable to Director of FPC, identifying them and their medication(s). Notify the Director of FPC if any worker needs to bring prescription drugs on to TDOC property. The Contractor's Superintendent shall maintain a copy of the form(s) on file. Approval from the Director of FPC/designee must be received before the medication(s) are allowed on site. Director of FPC may require verification of prescription(s)/medication(s). Director of FPC may refuse to permit prescription/medications on site. Only enough medication for one day may be brought on site. Contractor's Superintendent shall keep a copy of the form on file. It is

highly encouraged, if possible, that medications be taken at a time that allows for meds to be left outside the secure perimeter. Narcotic meds will not be allowed on the secure compound.

D. No computers, laptops, PDA's, cameras or other similar computer electronic devices will be allowed on site without written approval of the Director of FPC or designee.

E. Contractor required construction photographs and videos, digital or otherwise, taken at TDOC facilities or of the project site and buildings shall become the property of TDOC and shall not be used for purposes other than as progress documentation and other than construction related reports without the express written permission of the Director of FPC/Designee. Any photographs and videos, digital and print that include inmate faces shall be immediately destroyed and not used or printed for any purpose. These requirements shall include photographs taken or construction photos used by the Contractor's sub-contractors, vendors, etc. Use of finished construction photographs and videos, to include web-based use, will not be allowed unless approved in advance by the TDOC Director of FPC/Designee.

1.10 TOOLS AND MATERIALS:

A. A Class A tool is defined as any instrument that could be utilized:

1. To attempt an escape,
2. As a weapon,
3. To fabricate other materials into a weapon

B. Contractor shall make a concerted effort to introduce only necessary Class A tools on to TDOC property, and in the least possible number.

C. Hand tools shall be kept in Contractor's possession at all times when not properly stored. Tools shall be removed or placed in a locked toolbox, shed, trailer, or similar tool storage area at the end of each workday. Ramset tools may be stored on site; however, "shots" shall be removed daily and all spent shot accounted for by the contractor.

D. Storage of hand tools on site will be permitted but such tools are to be securely stored in a manner acceptable to the Director of FPC. Contractor shall provide a tool storage container and lock, a tool inventory; provide a key to the Director of FPC/designee until removal of container. An inventory of storage containers may be conducted at any time as determined necessary by the Director of FPC/designee.

E. Workers shall not accept anything from an inmate or provide any tools or supplies to an inmate. Inmates are not permitted access to construction documents and related papers. Any theft shall be reported immediately.

F. Report lost tools, devices, cell-phones, etc. to the Director of FPC/designee no later than the end of the day.

G. Contractor shall be required to submit Safety Data Sheets (SDS) to the Facility Safety Officer (FSO) for any product, chemicals, and materials brought onto TDOC property. Contractor shall review SDS information and requirements for SDS data submittal to the TDOC Facility Safety Officer prior to the start of Work.

1.11 CONTRACTOR USE OF PREMISES AND PRISON OCCUPANCY:

A. Use of the premises by Contractor will be limited to the 'Site/Project Boundaries' as identified in the Contract Documents to include temporary facilities, and reasonable access thereto. Space for staging

work, employee parking and related operations of Contractor and Contractor's employees may be provided, subject to availability. Coordinate use of premises under direction of the Director of FPC.

B. The Contractor is advised that the project site(s) is or will be an active correctional facility or other prison related area, and shall take all necessary precautions to assure the safety of the staff and inmates, State employees, visitors and other contractors day and night. The Contractor shall at all time conduct operations as to insure the least inconvenience and the greatest amount of safety and security for the State's use of other nearby areas by inmates, State employees and the general public. The Contractor acknowledges that there are inherent dangers involved while working at a prison and TDOC will use ordinary care to keep the premises reasonably safe during the contractor's access to the work site.

C. The Contractor shall schedule and carry out its work such that the normal operations of the facility are given first priority. This applies particularly to noise, utility, and security systems outages and restriction of access.

D. Provide and erect before any work begins, and maintain during the progress of the Work, all necessary protective and security barriers, and warning signal. The extent of this work and details of construction shall be in accordance with the requirements of all Federal, State, and local ordinances, codes and requirements; and shall meet the approval of all authorities having jurisdiction and the Director of FPC.

E. Control traffic to/from the work area(s) and occupied area(s) to prevent disruptions to the normal facility operation.

F. Exercise the utmost care to protect existing site features and landscaping etc. from damage. Contractor shall report damage immediately, but no later than the end of the workday, to the Director of FPC. Repair of security system cabling and cameras, lighting systems, fiber optic cabling and other critical systems shall be made immediately, and the costs of temporary replacement systems and TDOC labor, as needed, shall be the responsibility of the Contractor.

G. Institutional staff shall not receive deliveries for the Contractor or for the project. The Contractor shall receive all project related materials at their job site office or off-site, as required. Schedule deliveries to minimize use of site driveways and entrances.

1.12 TRANSPORTATION FACILITIES:

A. Provide adequate protection for lawns, curbs, and sidewalks over which trucks and equipment pass to reach the project site(s).

B. Contractor shall provide flagmen and traffic control management while using areas of the project site or outside the project limits. The Contractor shall be responsible for maintaining vehicular traffic on local roads adjacent to and directly leading to and/or through the areas that are affected by the construction project. Prior to changing any traffic patterns, the Contractor shall submit a Maintenance-of-Traffic Plan identifying how the vehicular and pedestrian traffic flows will be modified, subject to the review and approval by the Director of FPC, and authorities having jurisdiction. The Contractor shall provide proper signage and personnel to identify and manage temporary roadway relocations or locations where traffic may be impacted.

C. Contractor's Vehicles

1. Personal vehicles for Contractor's employees shall be parked at an area as designated by the Director of FPC. Parking permits may be required for all construction personnel and business vehicles.

2. Do not permit Contractor related vehicles to park on any street or other area of the State's property except in the area(s) so designated by the Director of FPC/designee.

3. Work trucks, with logos and company names clearly visible, necessary to the progress of the project (as determined by the Director of FPC) will be permitted on-site as needed if they are capable of being fully locked, including fuel tanks and tool compartments.

4. All vehicles shall be locked at all times. Any vehicle determined by the Director of FPC to be a security threat or represent what could be a threat will not be allowed on state property.

5. All drivers shall have a valid driver's license. Vehicle drivers without a valid driver's license will not be granted access to TDOC property and may be banned from the site and subject to arrest by local authorities.

1.13 WORK SEQUENCE:

A. The Work shall be executed to minimize disruption of activities at the project site(s) or buildings. Contractor shall submit a written and graphic plan for staging of work, and the layout and location of material staging areas.

B. The Director of FPC/designee shall be notified in writing seventy-two (72) hours prior to any utility, communication, or electronic security device(s) cut-off. The required notification of a cut-off or interruptions shall include, but not be limited to, service(s) to be cut-off, the expected impact on the facility, the date and time of the cut-off and the anticipated duration of the cut-off. Notification shall pertain to all or any portion of the project site(s), institution buildings, adjacent State sites, or private properties required by the progress of the Work. The Director of FPC shall have final approval of the exact time for and duration of any proposed shutdown.

1.14 JOB SIGNS AND PUBLICITY RELEASES:

A. Advertising Signage: The use or installation of Contractor or subcontractor advertising signage is prohibited. Do not display such advertising or job signs except as may be required for identification and deliveries.

B. Owner-Furnished Warning Signs: Whenever required by the TDOC On-site Representative, TDOC furnished warning signs shall be posted as directed.

C. The Contractor, sub-contractors, vendors, material supplies, etc. shall not release any information, story, photograph, plan or drawing-relating information about the project to anyone, including the press or other public communications mediums.

1.15 PRISON RAPE ELIMINATION ACT – PREA

A. TDOC follows PREA's zero tolerance for sexual contact or sexual misconduct. If the Contractor's employee(s) engage in sexual contact or sexual misconduct with staff or inmates, they will be referred for criminal prosecution when applicable.

B. IF A CONTRACTOR'S EMPLOYEES WITNESSES SEXUAL CONTACT AND/OR SEXUAL MISCONDUCT, THEY ARE REQUIRED TO REPORT SUCH INCIDENT IMMEDIATELY TO THE ON-DUTY TDOC SHIFT COMMANDER OR THE WARDEN.

END of SECTION

05 51 10
METAL STAIRS

1.0 SCOPE

This process specification provides the minimum requirements that govern structural steel repair aspects of rust removal, restoration and repairs to concrete pan treads and steel stairs for the project at the Tennessee Correction Academy (TCA). Procedural and quality assurance requirements are given. All work instructions and Weld Procedure Specifications (WPS) used during welding shall satisfy the requirements of this process specification and its applicable documents.

2.0 APPLICABILITY

This specification applies to stairways being repaired for this project. See site plan for location. The steel shall be cleaned at areas to be repaired and all scale and rust removed. The most common repair is to replace the existing treads and add 1/8" plate at remaining stringers and landings to reinforce them. Rust inhibitive coatings and waterproofing will also be applied.

3.0 USAGE

This process specification shall be typical for all the welding that is done under this scope of work.

To minimize fabrication costs most pieces can be fabricated and primed in the shop and welded in the field. Inspection of welds to be done by welding personnel qualified as Certified based on AWS D1.1 "Structural Welding Code—Steel.

The example details shown by the drawings shall illustrate weld size and lengths.

4.0 DESIGN

a) All shop drawings and repair drawings shall depict welded joints using the applicable symbols described in AWS A2.4.

b) Fillet welded joints are preferred and shall be full penetration where possible.

c) Intermittent welding (skip welds) shall be allowable.

d) Weld joints that are specified for intermittent welding shall have the ends of the parts, or departure from a straight weld line (e.g., square corner, etc.), welded regardless of the interval of the weld.

e) The drawings shall specify any additional special testing or inspection requirements beyond what is required herein.

5.0 REFERENCES

The standards and documents listed below shall be considered a part of this specification to the extent specified herein. Unless otherwise indicated, the revision that is in effect on the date of invitation for bids or the date of request for proposals shall apply.

American Welding Society (AWS) Standards

ANSI/AWS A2.4 *Standard Symbols for Welding, Brazing and Nondestructive Testing*

ANSI/AWS A3.0 *Standard Welding Terms and Definitions*

ANSI/AWS B2.1 *Standard for Welding Procedure and Performance Qualification*

ANSI/AWS B4.0 *Standard for Mechanical Testing of Welds*

ANSIAWS QC-1 *Standard for AWS Certification of Welding Inspectors*

6.0 MATERIAL REQUIREMENTS

All metals shall be Steel conforming to ASTM A 36/A356 M.
All connections shall be made to existing using arc welders with 6011 rods.

7.0 PROJECT REQUIREMENTS

All stairs shall be repaired per drawings. Stairs shall be taped off to prevent unauthorized access during welding and painting operations. They shall be barricaded at each landing to prevent accidental usage. Welding team shall field verify measurements of each repair area and fabricated pieces according to the requirements of this process specification. The requirements of the applicable codes and standards listed in Section 5.0, shall be met as a minimum.

Unless otherwise specified in design documentation, welds require only inspection to verify the type, nominal size, length, location, and that the welds were left in a condition exhibiting good workmanship practices. Good workmanship shall be defined as the presence of uniform appearance and overall clean weld zones and the absence of flash, tool marks, and other obvious discontinuities that would likely be questionable. Where a size is not specified, the nominal weld size shall be per best shop practice.

8.0 PROCESS DOCUMENTATION REQUIREMENTS

A Welding Procedure Specification (WPS) is a qualified written working procedure that must be developed before beginning production for each unique weld type to be produced. The WPS shall be prepared and retained as a permanent record and made available upon request. These procedures must contain, at a minimum, all of the essential welding parameters, an identification of the welding equipment (machine tool

or specific machine), and include any pertinent tooling information. One copy of the WPS shall be approved by Ronald LaFlamme at the TDOC prior to implementation. This copy shall be maintained in the vicinity of the welding activity area and shall be readily accessible by the welding operators, inspectors, supervision, and owner.

9.0 WELDING OPERATOR QUALIFICATION

Welding shall be performed by a welding operator qualified and certified in accordance with AMS-STD-1595 . Sufficiently detailed records shall be maintained to demonstrate continuity of operator performance on the welding system (machine tool) or system(s) on a semi-annual (6 month) basis. These records shall be made available upon request.

10.0 FINISHING GENERAL

Comply with NAAMM'S "Metal Finishes Manual for Architectural and Metal Products" for recommendations for applying and designating finishes.

Primer finish to be applied to work areas as soon as each is repaired using welding procedures specified above. The goal being to prevent re-oxidation of the bare metal.

Finishes shall be as directed in Painting section 09900 below.

SECTION 05 51 19
SLIP RESISTANT STAIR TREADS

PART 1 GENERAL

1.1 SECTION INCLUDES

A. Slip-resistant stair treads.

1.2 RELATED SECTIONS

A. Section 05 51 10 – Welding for stairs.

1.3 REFERENCES

Specifier Notes: List standards referenced in this section, complete with designations and titles. This article does not require compliance with standards, but is merely a listing of those used.

A. ASTM C 633 - Adhesion or Cohesive Strength of Flame-Sprayed Coatings.

B. ASTM E 140 - Hardness Conversion Tables for Metals.

C. ASTM E 384 - Microhardness of Materials.

1.4 SUBMITTALS

A. Submital of items below shall be made to Designer and approval shall be granted in writing prior to purchase.

B. Product Data: Submit manufacturer's standard product data for stair treads to be installed.

C. Shop Drawings: Submit manufacturer's shop drawings, showing slip resistant metal fabrications, sizes, dimensions, manufacturer's factory-applied finishes, fastening, and installation details.

1.5 DELIVERY, STORAGE, AND HANDLING

A. Delivery: Deliver materials to site in manufacturer's original, unopened containers and packaging, with labels clearly identifying product name and manufacturer.

B. Storage: Store materials in a clean, dry area in accordance with manufacturer's instructions. Allow adequate ventilation of products to prevent condensation forming on product surfaces. Do not store for extended time in original banding or distortion may occur in products.

C. Handling: Protect materials, surfaces, and finishes during handling and installation to prevent damage. Avoid all metal on metal contact with aluminum surfaces.

PART 2 PRODUCTS

2.1 MANUFACTURER

A. **Perf-O-Grip by Direct Metals, Atlanta Location:** 3775 Cobb International Blvd. , Kennesaw, GA 30152-4390; *Phone:* 770-528-9001 *Fax:* 770-528-9002 *Toll-Free:* 1-800-711-4939; info@directmetals.com

B. **Perforated plate withFlex-Grip by *Slip*NOT®** Metal Safety Flooring, Division of W.S. Molnar Company, 2545 Beaufait Street, Detroit, Michigan 48207.
Toll Free (800) 754-7668. Phone (313) 923-0400. Fax (313) 923-4555.
Web Site www.slipnot.com. E-Mail info@slipnot.com.

C. **Traction Tread Plank Grating by Metals, Inc.;** 185 Oakleaf Oval Oakwood Village, OH 44146; Toll Free Phone 1 800-492-7304 or 440-439-4799 Fax 440-439-0577, sales@metals-inc.com

2.2 SLIP-RESISTANT METAL FABRICATIONS

Specifier Notes: Special shapes, sizes, and fabrications are available for all slip-resistant metal fabrications. Consult W.S. Molnar Company for assistance in editing this article for the specific application.

A. Plate Stair Treads with Perforated Plate and non slip finish.

1. Hole Size: As indicated on drawings.
2. Plate Hole and Margin Spacing: As indicated on drawings.
3. Size: As indicated on the drawings.

2.3 MATERIALS

A. Steel grip material on Galvanized Steel Tread Substrate:

1. Type: Anti-slip, non-gritted, steel surface on steel substrate. Specifier Notes: Specify based on the following:

2. Surface texture shall be as per plan notes.

Grade 1 - Fine: A fine surface texture with minimum surface depth variation for comfort where pedestrian traffic flow is not directional only, but requires a lot of turning and reversing. Subject to only moderate thin liquid accumulation.

Grade 2 - Medium: A medium surface texture particularly applicable to heavier and more viscous accumulations. This is the all-purpose surface.

Grade 3 - Coarse: A coarse surface texture applicable for extremely heavy traffic and higher debris accumulation and high viscosity fluids.

3. Surface: All metal plasma stream deposition process bonds surface to substrate. Anti-slip primarily martensitic steel surface consisting of a random hatch matrix. Add to all surface coverage 100%.

4. Surface Hardness, Rockwell C Scale, ASTM E 140 and E 384: Minimum of 55.

5. Bond Strength, Surface to Substrate, ASTM C 633: Minimum of 4,000 psi.

6. Coefficient of Friction, Anti-Slip Surface: Minimum of 0.6.

7. UL Listed: UL 410 slip resistant.

B. Aluminum Surface On Aluminum Substrate:

1. Type: Anti-slip, aluminum surface on aluminum substrate.

2. Surface Texture: [Grade 1, Fine] [Grade 2, Medium].

3. Bond Strength, Surface to Substrate, ASTM C 633: Minimum of 2,000 psi.

4. Coefficient of Friction, Anti-Slip Surface: Minimum of 0.6.

5. UL Listed: Slip-resistant.

2.4 FACTORY-APPLIED FINISHES

A. Corrosion Resistance.

1. Steel must be protected from corrosion/rusting as with any steel product. Both the surface and substrate material (Plate/Grating/Etc.) shall be protected.

2. The Non-Slip Tread surface is a molten metal plasma stream deposition resulting in a random hatch matrix. The surface texture is available in fine (Grade 1), medium (Grade 2) and coarse (Grade 3) and hot dipped galvanized is the required surface protection material required for this project..

3. The Grade 1 - Fine surface is about 0.010" in depth and any finish should not exceed 5 mils to prevent degradation of non-slip performance.

4. The Grade 2 - Medium surface has an average depth of about 0.020" the total surface treatment should not exceed a total of 10 mils

5. Surface treatments for Grade 3 - Coarse materials should not exceed 15 - 18 mils.

B. Hot-Dip Zinc: Galvanized.

Manufacturer may contract directly with Voigt & Schweitzer Galvanizers in Redford, MI. or some other third party, the following guidelines shall be observed.

1. For ambient temperature hydrochloric acid solutions, acid pickling times should not exceed ten (10) minutes.

2. Heated sulfuric acid solutions are not recommended and if used, should not exceed a minute or so immersion.
Care should be taken that rack loading allows for sufficient spacing between items so that the heat of the pickling process does not create "hot spots" within the pickling tanks and damage to the non-slip surface.

3. Any additional steel, such as stringers, support angles, stiffeners, etc., be shot or sand blasted prior to attachment to the slip resistant surface materials. These pieces should be de-scaled and rust free prior to submission to the galvanizer.

4. All steel material shall be protected from humidity and must be protected from the elements. Surface rust will require sufficient acid pickling to allow for proper galvanizing and excess acid exposure will result in damage to the non-slip surface. Keep material inside and wrapped to prevent surface rust from forming.

5. Care must be taken in the pickling portion of the hot dipped galvanizing process as the non-slip surface may lift off if pickling times exceed recommendations.

PART 3 EXECUTION

3.1 EXAMINATION

A. Examine areas to receive slip-resistant metal fabrications. Notify Designer if areas are not acceptable. Do not begin installation until unacceptable conditions have been corrected.

3.2 INSTALLATION

A. Install slip-resistant metal fabrications at locations indicated on the drawings and in accordance with manufacturer's instructions.

B. Install slip-resistant metal fabrications level, square, rigid, with flush installation.

C. Fasten slip-resistant metal fabrications to support steel as indicated on the drawings.

D. Repair damaged factory-applied finishes as directed by Designer.

E. Replace defective or damaged slip-resistant metal fabrications as directed by engineer.

SECTION 099000

PAINTS AND COATINGS

PART 1 GENERAL

1.1 SECTION INCLUDES

A. Surface preparation / structural cleaners.

B. Primer/sealers.

C. Paint and waterproofing finishes.

D. Interior paint systems. (Zinsser & XIM).

E. Interior paints and coatings. (Rust-Oleum).

F. Exterior paint systems. (Zinsser & XIM).

G. Exterior paints and coatings. (Rust-Oleum).

1.2 REFERENCES

A. Green Seal, Inc.: GS-11 - Standard for Paints and Coatings.

B. Ozone Transmission Commission (OTC): Established levels of Volatile Organic Compounds.

C. The Society for Protective Coatings (SSPC):
1. SSPC (PM1) - Steel Structures Painting Manual, Vol. 1, Good Painting Practice; Society for Protective Coatings.
2. SSPC (PM2) - Steel Structures Painting Manual, Vol. 2, Systems and Specifications; Society for Protective Coatings.

D. United States Green Building Council (USGBC): LEED - Leadership in Energy and Environmental Design.

1.3 DEFINITIONS

A. Environments: The following terms distinguish between different corrosive exposures:
1. "Severe environments" are highly corrosive industrial atmospheres with sustained exposure to high humidity and condensation and with frequent cleaning using strong chemicals. Environments with heavy concentrations of strong chemical fumes and frequent splashing and spilling of harsh chemical products are severe environments.
2. "Moderate environments" are corrosive industrial atmospheres with intermittent exposure to high humidity and condensation, occasional mold and mildew development, and regular cleaning with strong chemicals. Environments with exposure to heavy concentrations of chemical fumes and occasional splashing and spilling of chemical products are moderate

environments.

3. "Mild environments" are industrial atmospheres with normal exposure to moderate humidity and condensation, occasional mold and mildew development, and infrequent cleaning with strong chemicals. Environments with low levels of mild chemical fumes and occasional splashing and spilling of chemical products are mild environments. Normal outdoor weathering is also considered a mild environment.

B. Commercial as used in this Section refers to a product well suited for a commercial application.

C. DFT as used in this Section refers to the Dry Film Thickness of the coating.

D. Enamel refers to any acrylic or alkyd (oil) base paint which dries leaving an eggshell, pearl, satin, semi-gloss or high gloss enamel finish.

E. OTC as used in this Section refers to the Ozone Transmission Commission. OTC has established the following VOC levels for the Northeastern United States. Products shall meet the following OTC limits for VOC's.

1. Interior flat paints: 100 grams per liter or less, per gallon.
2. Interior enamels: 150 grams per liter or less, per gallon.
3. Interior stains: 250 grams per liter or less, per gallon.
4. Interior primers: 200 grams per liter or less, per gallon.
5. Rust preventive coatings: 400 grams per liter or less, per gallon.
6. Dry fog coatings: 400 grams per liter or less, per gallon.
7. Floor coatings: 250 grams per liter or less, per gallon.

F. VOC as used in this Section refers to Volatile Organic Compounds found in primers, paints, sealers and stains. The level of VOCs appears after each product listed in the Schedule in grams per liter (g/L).

G. Paints are available in a wide range of sheens or glosses, as measured by a gloss meter from a 60 degree angle from vertical, as a percentage of the amount of light that is reflected. The following terms are used to describe the gloss of our products.

1. Eggshell refers to low-sheen finish with a gloss range between 5 to 8 when measured at a 60-degree meter or 15 to 20 when measured at an 85-degree meter.
2. Satin refers to low-sheen finish with a gloss range between 18 to 23 when measured at a 60-degree meter or 47 to 53 when measured at an 85-degree meter.
3. Semi-Gloss refers to medium-sheen finish with a gloss range between 40 to 55 when measured at a 60-degree meter or 70 to 85 when measured to an 85-degree meter.
4. Gloss/Full Gloss refers to high-sheen finish with a gloss range more than 70 when measured at a 60-degree meter.
5. Alternate Coating Terms:
   a. Flat refers to a lusterless or matte finish with a gloss range below 15 when measured at an 85-degree meter.
   b. Eggshell/Satin refers to low-sheen finish with a gloss range between 20 and 35 when measured at a 60-degree meter.

1.4 QUALITY ASSURANCE

A. Installer Qualifications: Employ a firm or individual experienced in applying paints and coatings similar in material, design, and extent to those indicated for this project, whose work has resulted in applications with a record of successful in-service performance.

B. Paint exposed surfaces. If an item or a surface is not specifically mentioned, paint the item or surface the same as similar adjacent materials or surfaces. If a color of finish is not indicated, Architect will select from standard colors and finishes available.

C. Do not paint prefinished items, concealed surfaces, finished metal surfaces, operating parts, and labels unless indicated.

1.5 DELIVERY, STORAGE, AND HANDLING

A. Deliver materials to Project site in manufacturer's original, unopened packages and containers bearing manufacturer's name and label. Packaging shall bear the manufacturer's name, label, and the following list of information:
   1. Product name and type (description).
   2. Application and use instructions.
   3. Surface preparation.
   4. VOC content.
   5. Environmental issues.
   6. Batch date.
   7. Color number.

B. Storage:
   1. Store and dispose of solvent-based materials, and materials used with solvent-based materials, in accordance with requirements of local authorities having jurisdiction.
   2. Store materials in an area that is within the acceptable temperature range, per manufacturer's instructions. Protect from freezing.
   3. Store materials not in use in tightly covered containers in a well-ventilated area at a minimum ambient temperature of 45 deg F (7 deg C).
   4. Maintain storage containers in a clean condition, free of foreign materials and residue.

C. Handling: Maintain a clean, dry storage area, to prevent contamination or damage to the coatings.

1.6 PROJECT CONDITIONS

A. Maintain or anticipate environmental conditions (temperature, humidity, and ventilation) within limits recommended. by manufacturer for optimum results. Do not install products under environmental conditions outside manufacturer's absolute limits.

B. Apply waterborne paints only when temperatures of surfaces to be painted and surrounding air are between 50 and 90 deg F (10 and 32 deg C).

C. Apply solvent-thinned paints only when temperatures of surfaces to be painted and surrounding air are between 45 and 95 deg F (7 and 35 deg C).

D. Do not apply paint in snow, rain, fog, or mist; or when relative humidity exceeds 85 percent; or at temperatures less than 5 deg F (3 deg C) above the dew point; or to damp or wet surfaces.
   1. Painting may continue during inclement weather if surfaces and areas to be painted are enclosed and heated within temperature limits specified by manufacturer during application and drying periods.

E. No exterior or interior painting shall be done until surfaces are thoroughly dry and cured.

PART 2PRODUCTS

2.1 MANUFACTURERS

A. Acceptable Manufacturer: PPG Architectural Finishes, Inc.; One PPG Place; Pittsburgh, PA 15272. Toll Free Tel: 888-PPG-IDEA. Email: request info; Web: www.ppgideascapes.com Local Vendor: Builders Supply Company, Inc. 301 s. Atlantic Street; Tullahoma, Tn. 37358 Phone (931)455-3419 .

B. Acceptable Manufacturer: Rust-Oleum®, which is located at: 11 Hawthorn Pkwy. ; Vernon Hills, IL 60061; Toll Free Tel: 800-323-3584; Tel: 847-367-7700; Fax: 847-816-2330; Email: request info (productsupport@rustoleum.com); Web: www.rustoleum.com Local Vendor Fastenal, 205 Industrial Blvd. Tullahoma, Tn. Phone (931)461-8885

C. Acceptable Manufacturer: Sherwin-Williams, which is located at: 101 Prospect Avenue; Cleveland, OH 44115; Toll Free Tel: 800-524-5979; Tel: 216-566-2000; Fax: 440-826-1989; Email:request info (specifications@sherwin.com); Web:www.sherwin-williams.com/pro/services/architects_designers/?WT.mc_id=SWRedirect_ProServices_Architects

D. Requests for substitutions will be considered on an or equal basis with TDOC approval in writing prior to purchase or installation of materials.

2.2 APPLICATIONS/SCOPE

A. Exterior Surfaces to be Coated:
1. Steel Stair Structural Steel
2. Columns and Roof
3. Railings and Pickets

2.3 PAINT MATERIALS - GENERAL

A. Material Compatibility: Provide primers and finish-coat materials that are compatible with one another and with the substrates indicated under conditions of service and application, as demonstrated by manufacturer based on testing and field experience.

B. VOC Classification: Provide coating materials, including primers, undercoats, and finish-coat materials, that have a VOC classification of 450 g/l or less.

C. Color: Refer to Finish Schedule and Paint Legend for paint colors.

2.4 SURFACE PREPARATION / STRUCTURAL CLEANERS

A. Prepare surfaces for paint with: Zinsser JOMAX - House Cleaner and Mildew Killer.

2.5 PAINT PRODUCTS

A. PPG Paints Exterior for Metal Surfaces:
1. Primer: Coraflon ADS Pimer
2. Finish coats: Glyptex Urethane Gloss Enamel

B. Rustoleum Exterior for Metal Surfaces:
1. Primer Industrial Choice 6100 System Shop Coat Primer
2. Finish coats: Stops Rust Alkyd Protective Enamel

C. Sherwin Williams for Metal Surfaces:
   1. Primer B50NZ6 Rust Inhibitor Primer
   2. Finish coats: B54B11 enamel
   3. Or Equal by other such as Koppers or Tnemec

PART 3 EXECUTION

3.1 EXAMINATION

A. Review product manufacturer's special instructions for surface preparation, application, temperature, re-coat times, and product limitations.

B. Do not begin installation until substrates have been properly prepared.

C. Ensure that surfaces to receive paint are dry immediately prior to application.

D. Ensure that moisture-retaining substrates to receive paint have moisture content within tolerances allowed by coating manufacturer. Where exceeding the following values, promptly notify Architect and obtain direction before beginning work.
   1. Concrete and Masonry: 13 percent. Allow new concrete to cure a minimum of 28 days.
   2. Exterior Wood: 17 percent.
   3. Interior Wood: 15 percent.
   4. Interior Finish Detail Woodwork, Including Trim, and Casework: 10 percent.
   5. Plaster and Gypsum: 15 percent.
   6. Concrete Slab-On-Grade: Perform calcium chloride test over 24 hour period or other acceptable test to manufacturer. Verify acceptable moisture transmission and pH levels.

E. Examine surfaces to receive coatings for surface imperfections and contaminants that could impair performance or appearance of coatings, including but not limited to, loose primer, rust, scale, oil, grease, mildew, algae, or fungus, stains or marks, cracks, indentations, or abrasions.

F. Correct conditions that could impair performance or appearance of coatings in accordance with specified surface preparation procedures before proceeding with coating application.

G. If substrate preparation is the responsibility of another installer, notify Architect of unsatisfactory preparation before proceeding. Commencement of work constitutes acceptance of conditions.

H. Coordination of Work: Review other Sections in which primers are provided to ensure compatibility of the total system for various substrates. On request, furnish information on characteristics of finish materials to ensure use of compatible primers.
   1. Notify Designer regarding anticipated problems when using the materials specified over substrates primed by others.
   2. If a potential incompatibility of primers applied by others exists, obtain the following from the primer Applicator before proceeding:
      a. Confirmation of primer's suitability for expected service conditions.
      b. Confirmation of primer's ability to be top coated with materials specified.

3.2 PREPARATION - GENERAL

A. Clean surfaces thoroughly prior to coating application.
   1. Remove dirt, grease, oil, salt and chemical contaminants by washing the surface with Industrial Pure Strength Cleaner/Degreaser, commercial detergent or other suitable cleaner. Rinse thoroughly with fresh water and allow to fully dry. If any mold or mildew is present on the surface clean further with one quart of household bleach added to a gallon of water. Rinse with clean water. Severely mildewed areas should be cleaned with a chlorinated cleansing powder and thoroughly rinsed with water. All surfaces shall be dry at time of application.
   2. Remove hardware and hardware accessories, plates, machined surfaces, lighting fixtures, and similar items already installed that are not to be painted. If removal is impractical or impossible because of size or weight of the item, provide surface-applied protection before surface preparation and painting.
   3. After completing painting operations in each space or area, reinstall items removed using workers skilled in the trades involved.
   4. Cleaning: Before applying paint or other surface treatments, clean substrates of substances that could impair bond of the various coatings. Remove oil and grease before cleaning.
   5. Schedule cleaning and painting so dust and other contaminants from the cleaning process will not fall on wet, newly painted surfaces.
   6. If excessive time has elapsed since the primer was applied, remove all dirt, grease, oil, salt and chemical contaminants by washing the surface with Pure Strength Cleaner/Degreaser, item #3599402, commercial detergent or other suitable cleaner. Mold and mildew shall be cleaned with a chlorinated cleaner of bleach solution. Rinse thoroughly with fresh water and allow to fully dry. All surfaces shall be dry at time of application.

B. Do not start work until surfaces to be finished are in proper condition to produce finished surfaces of uniform, satisfactory appearance.

C. Stains and Marks: Remove completely, if possible, using materials and methods; recommended. by coating manufacturer; cover stains and marks which cannot be completely removed with isolating primer or sealer; recommended. by coating manufacturer to prevent bleed-through.

D. Remove or protect adjacent hardware, electrical equipment plates, mechanical grilles and louvers, lighting fixture trim, and other items not indicated to receive coatings.

E. Move or protect equipment and fixtures adjacent to surfaces indicated to receive coatings to allow application of coatings.

F. Protect adjacent surfaces not indicated to receive coatings.

G. Prepare surfaces in accordance with manufacturer's instructions for specified coatings and indicated materials, using only methods and materials; recommended. by coating manufacturer.

3.3 SURFACE PREPARATION

A. General: Surfaces shall be dry and in sound condition. Remove oil, dust, dirt, loose rust, peeling paint or other contamination to ensure good adhesion.
   1. Remove mildew before painting by washing with a solution of 1 part liquid household bleach and 3 parts of warm water. Apply the solution and scrub the mildewed area. Allow the solution to remain on the surface for 10 minutes. Rinse thoroughly with clean water and allow the surface to dry 48 hours before painting. Wear protective glasses or goggles, waterproof gloves, and

protective clothing. Quickly wash off any of the mixture that comes in contact with your skin. Do not add detergents or ammonia to the bleach/water solution.

2. Remove items including but not limited to thermostats, electrical outlets, switch covers and similar items prior to painting. After completing painting operations in each space or area, reinstall items removed using workers skilled in the trades involved.
3. Provide barrier coats over incompatible primers or remove and reprime.
4. Provide barrier coats over incompatible primers or remove primers and reprime substrate.

B. Tile: Clean per SSPC-SP1 using Zinsser JOMAX - House Cleaner and Mildew Killer. Zinsser JOMAX - House Cleaner and Mildew Killer to remove mold and dirt. Apply a test area, priming as required. Allow the coating to dry at least one week before testing. If adhesion is poor, Brush Blast per SSPC-SP7 is necessary to remove these treatments.

3.4 APPLICATION

A. Install in accordance with manufacturer's instructions. Provide surface with uniform appearance, free of drips, runs, sags and other imperfections.

B. Material Preparation: Carefully mix and prepare coating materials according to manufacturer's written instructions.
1. Maintain containers used in mixing and applying coatings in a clean condition, free of foreign materials and residue.
2. Stir materials before applying to produce a mixture of uniform density. Stir as required during application. Do not stir surface film into the material. Remove film and, if necessary, strain coating material before using.
3. Use only the type of thinners approved by manufacturer and only within recommended limits.
4. Tinting: Tint each undercoat a lighter shade to simplify identification of each coat when multiple coats of same material are applied. Tint undercoats to match the color of the finish coat, but provide sufficient differences in shade of undercoats to distinguish each separate coat.

C. General: Apply paint according to manufacturer's written instructions. Use applicators and techniques best suited for substrate and type of material being applied.

D. General: Apply high-performance coatings according to manufacturer's written instructions.
1. Use applicators and techniques best suited for the material being applied.
2. Do not apply high-performance coatings over dirt, rust, scale, grease, moisture, scuffed surfaces, or conditions detrimental to forming a durable coating film.
3. Coating surface treatments, and finishes are indicated in the coating system descriptions.
4. Provide finish coats compatible with primers used.
5. The term "exposed surfaces" includes areas visible when permanent or built-in fixtures, convector covers, grilles, covers for finned-tube radiation, and similar components are in place. Extend coatings in these areas, as required, to maintain system integrity and provide desired protection.

E. Application Procedures: Apply coatings by brush, roller, spray, or other applicators

according to manufacturer's written instructions.

1. The number of coats and film thickness required is the same regardless of application method.
2. Completed Work: Match approved Samples for color, texture, and coverage. Remove, refinish, or recoat work that does not comply with specified requirements.

3.5 FIELD QUALITY CONTROL

A. Owner reserves the right to invoke the following test procedure at any time and as often as Owner deems necessary during the period when paint is being applied:

1. Owner will engage a qualified independent testing agency to sample paint material being used. Samples of material delivered to Project will be taken, identified, sealed, and certified in the presence of Contractor.
2. Owner may direct Contractor to stop painting if test results show material being used does not comply with specified requirements. Contractor shall remove noncomplying paint from Project site, pay for testing, and repaint surfaces previously coated with the non complying paint. If necessary, Contractor may be required to remove non complying paint from previously painted surfaces if, on repainting with specified paint, the two coatings are incompatible.

3.6 CLEANING

A. After completing painting, clean glass and paint-spattered surfaces. Remove spattered paint by washing and scraping without scratching or damaging adjacent finished surfaces.

3.7 PROTECTION

A. Protect work of other trades, whether being painted or not, against damage from painting. Correct damage by cleaning, repairing or replacing, and repainting, as approved by Architect.

B. Provide "Wet Paint" signs to protect newly painted finishes. After completing painting operations, remove temporary protective wrappings provided by others to protect their work.

C. After work of other trades is complete, touch up and restore damaged or defaced painted surfaces.

END OF SECTION

GENERAL NOTES

1. Project Name: Tennessee Correction Academy (TCA).
2. Owner : State of Tennessee, Department of Correction.
3. Location : Tullahoma, Tennessee.
4. Requisition for concrete restoration for the Rye Building.
5. Contractor is strongly encouraged to visit site to see existing conditions prior to submitting a bid for this project.

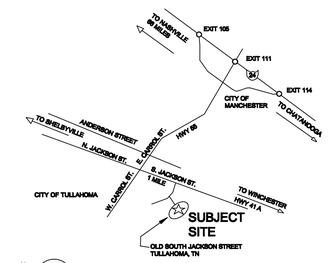

VICINITY MAP

NOT TO SCALE

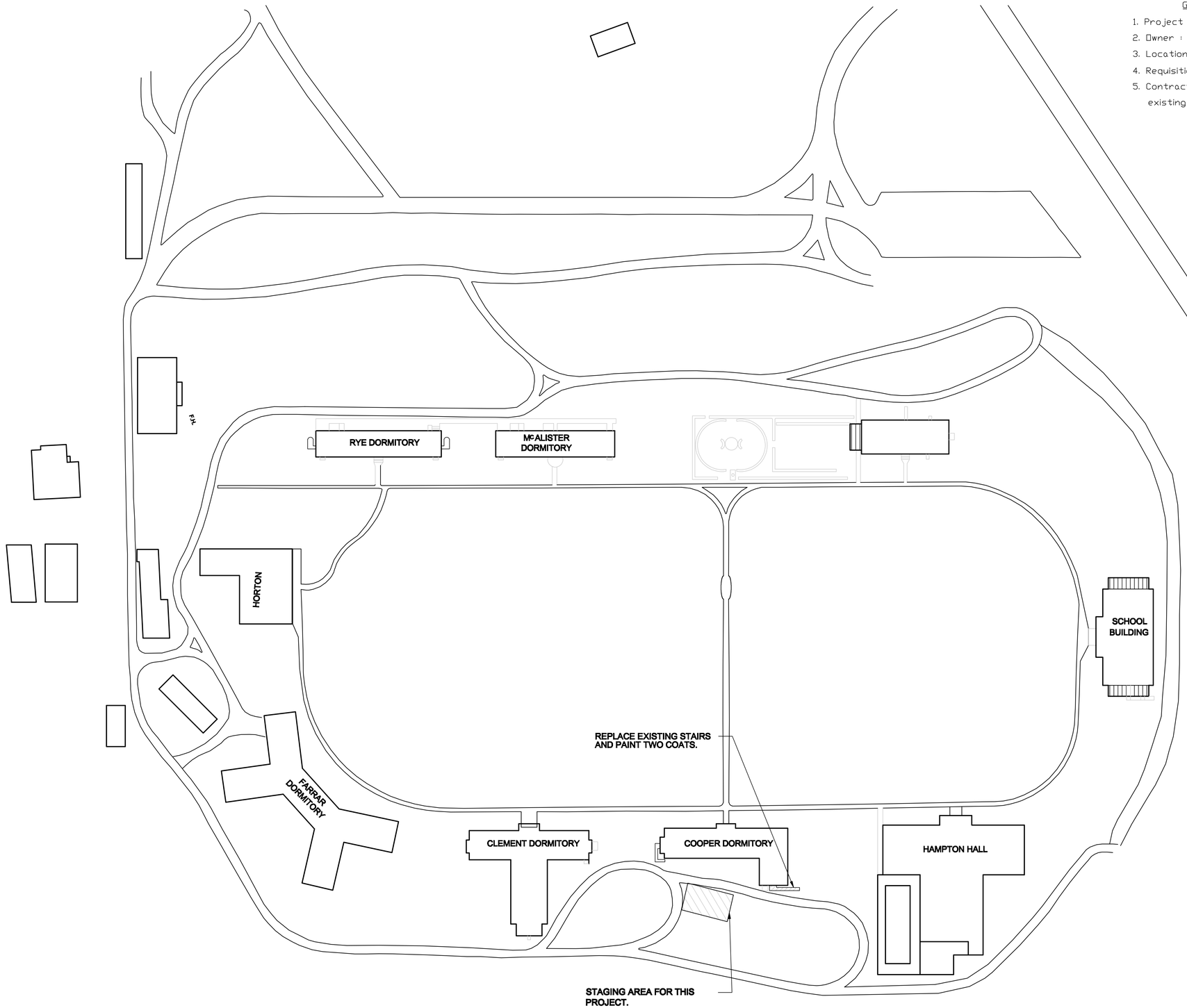

1 C-1 KEYPLAN

SCALE 1"=50'-0"

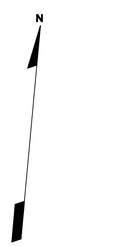

SITE PLAN

SCALE 1" = 50'-0"

0 50' 100'

LIST OF DRAWINGS

C-1 COVER SHEET AND SITE PLAN

A-1 STAIR ELEVATIONS AND BUILDING FLOOR PLAN

A-2 ARCHITECTURAL PLAN, SECTION AND DETAIL AT HANDRAIL

A-3 STAIR SECTION DETAILS AND ENLARGED PLAN DETAIL

S-1 STAIR FOUNDATION PLAN, ROOF FRAMING PLAN AND DETAILS

State of Tennessee
Department of Correction
Designer: Ronald J. LaFlamme
Ground Floor Rachel Jackson Building
320 6th Avenue North
Nashville, TN 37243-0465
615-741-1000 ext. 8228

TENNESSEE CORRECTION ACADEMEY
COOPER EXTERIOR STAIRS NORTH SIDE

DATE: 04/27/15

C-1

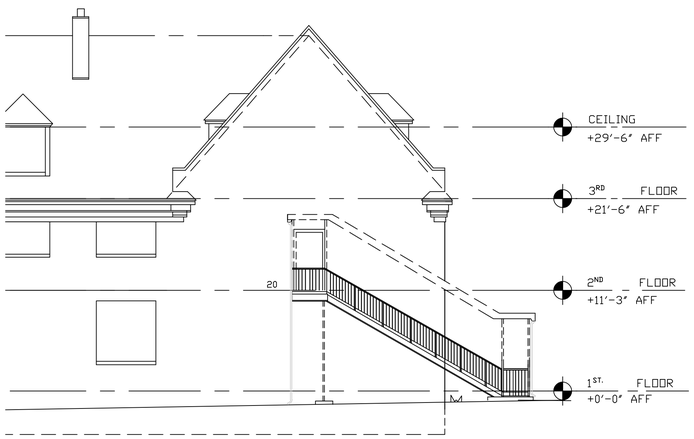

5 NORTH ELEVATION

Scale: 1/8"=1'-0"

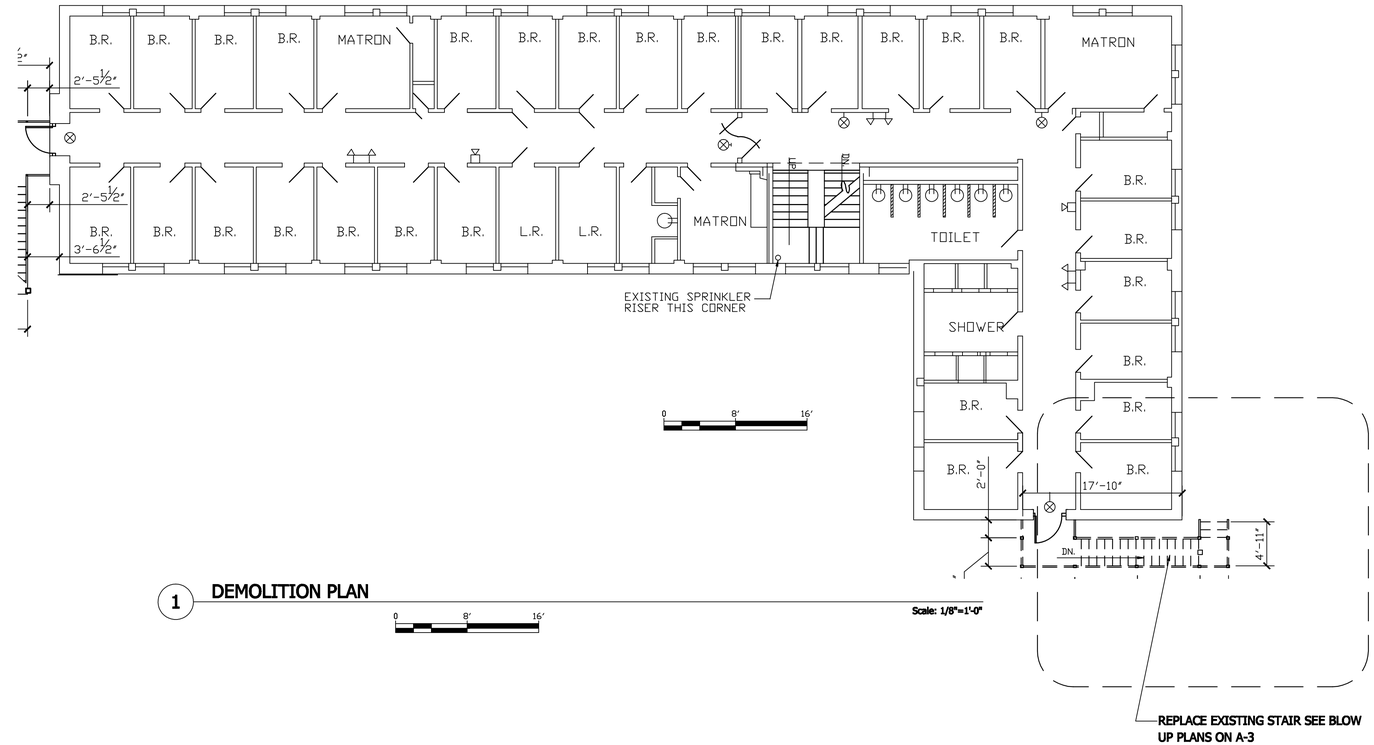

1 DEMOLITION PLAN

Scale: 1/8"=1'-0"

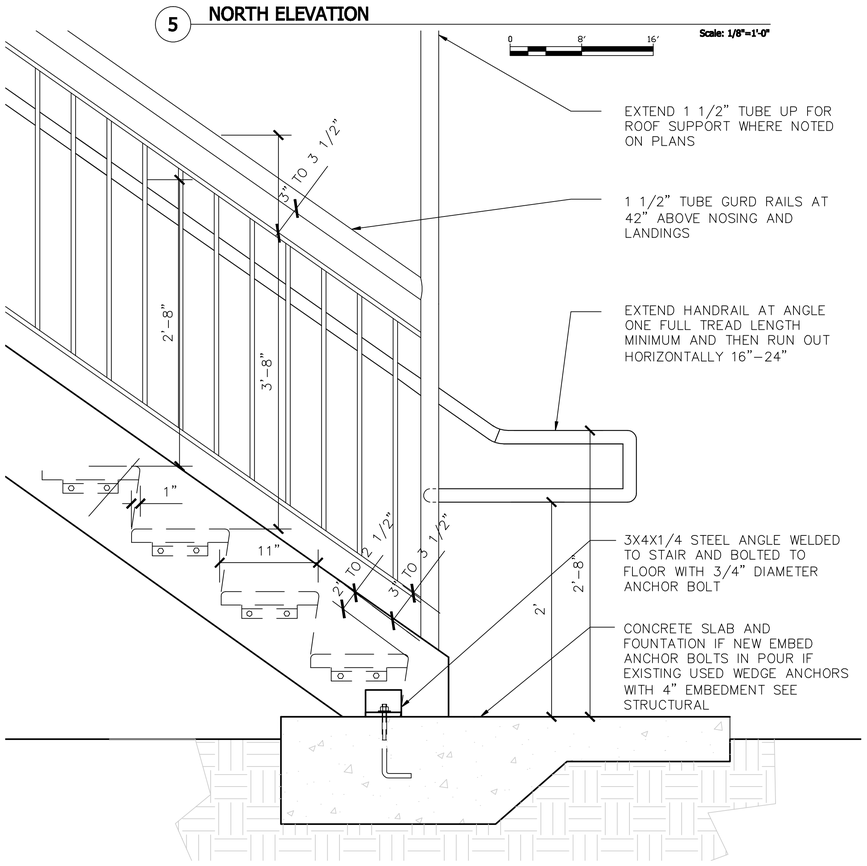

4 BOTTOM OF STAIR DETAIL

Scale: 1 1/2"=1'-0"

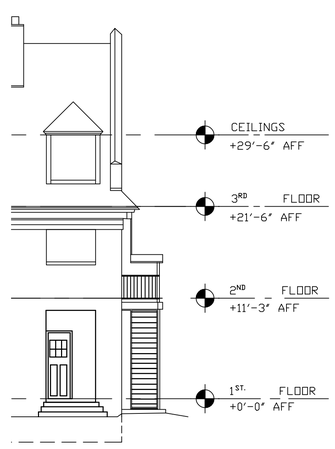

3 SOUTH ELEVATION

Scale: 1/8"=1'-0"

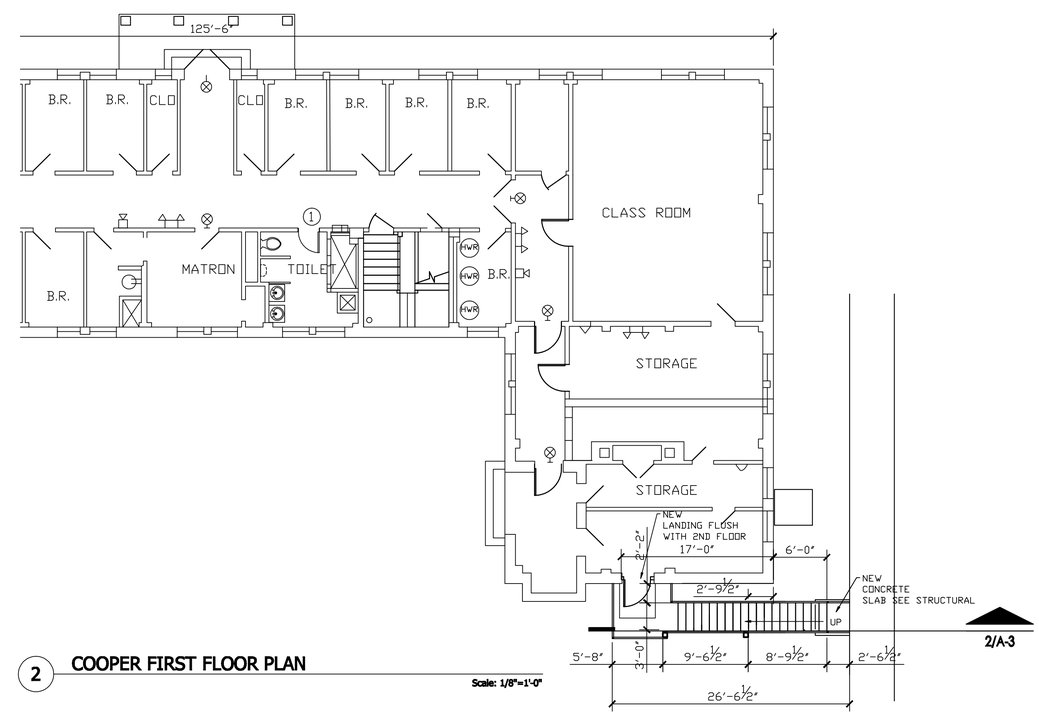

2 COOPER FIRST FLOOR PLAN

Scale: 1/8"=1'-0"

State of Tennessee
Department of Correction
Designer: Ronald J. LaFlamme
Ground Floor Rachel Jackson Building
320 Sixth Avenue North
Nashville, TN 37243-0465
615-741-1000 ext. 8228

TENNESSEE CORRECTION ACADEMEY
COOPER EXTERIOR STAIRS NORTH SIDE

DATE:
04/27/15

A-1

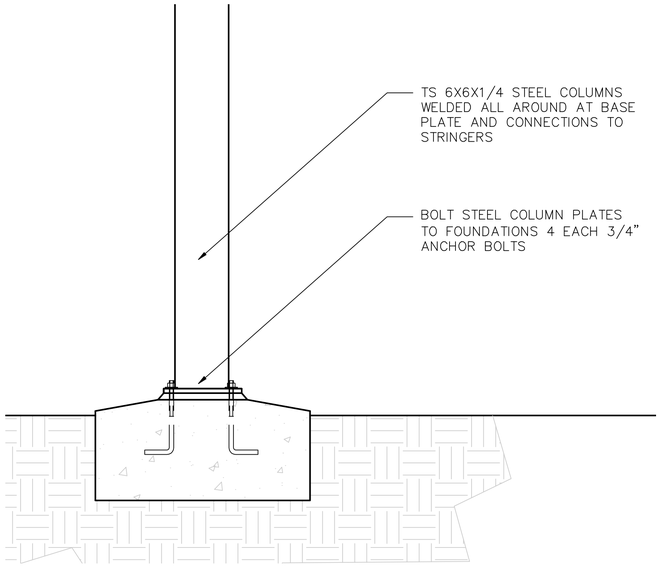

3 TYPICAL STAIR COLUMN

Scale: 1 1/2"=1'-0"

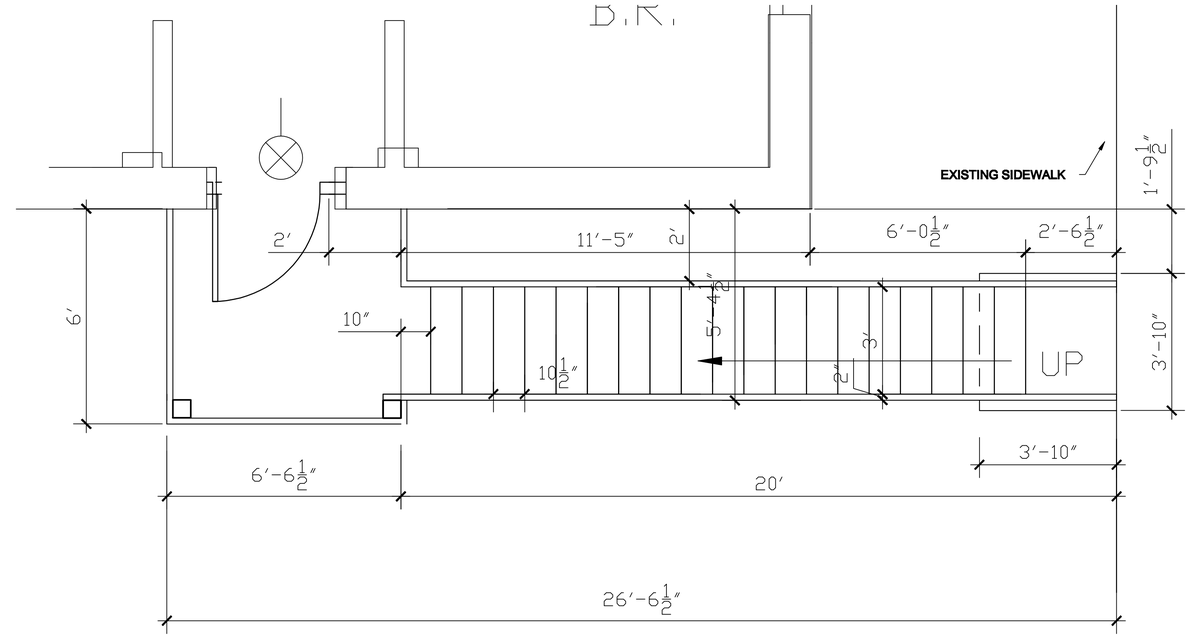

1 NORTH STAIR FLOOR PLAN

Scale: 1/2"=1'-0"

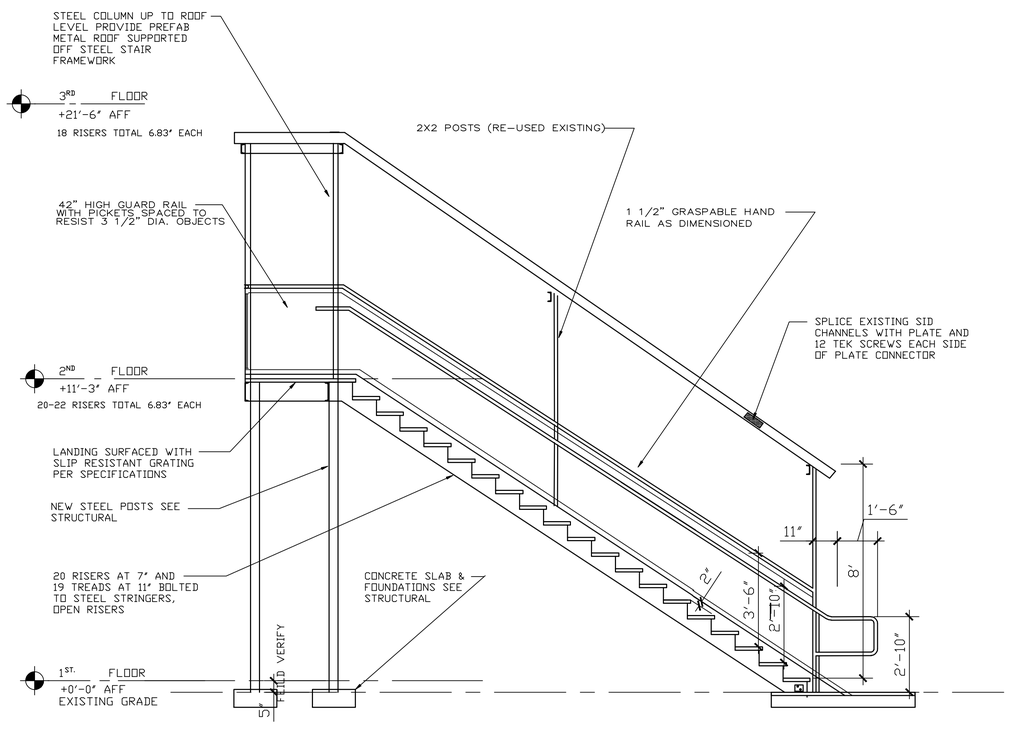

2 NORTH STAIR SECTION

Scale: 3/8"=1'-0"

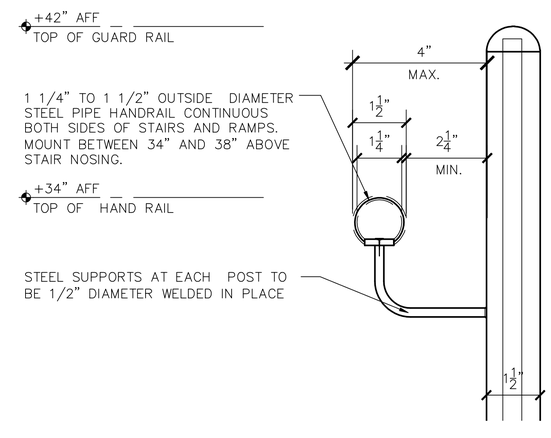

4 HANDRAIL DETAIL

Scale: 6"=1'-0"

State of Tennessee
Department of Correction
Designer: Ronald J. LaFlamme
Ground Floor Rachel Jackson Building
320 Sixth Avenue North
Nashville, TN 37243-0465
615-741-1000 ext. 8228

TENNESSEE CORRECTION ACADEMEY
COOPER EXTERIOR STAIRS NORTH SIDE

DATE:
04/27/15

A-2

Bearing Bar Options	
1" x 3/16"	Max. Span 36"

Galvanized Steel

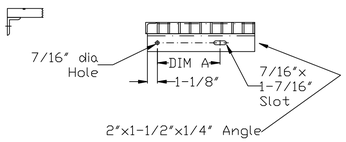

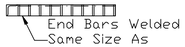

Standard Carrier Angle

End Plate Options

Width	DIM A
7-1/8"	4-1/2"
up to 9"	4-1/2"
9-5/16"	7"
and Over	

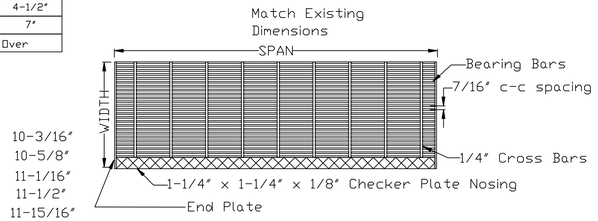

Alloy is Galvanized Steel

ADA Compliant Spacing

4 TREAD SPECIFICATIONS

NONE

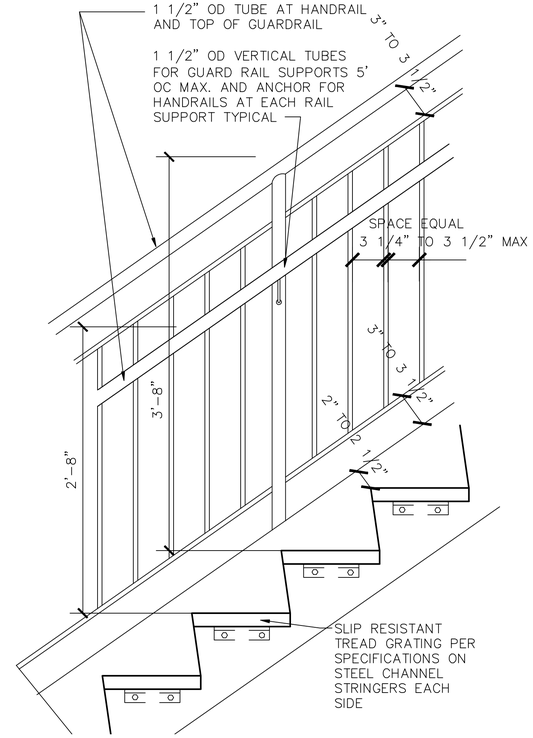

5 HANDRAIL TYPICAL SIDE VIEW

Scale: 1 1/2"=1'-0"

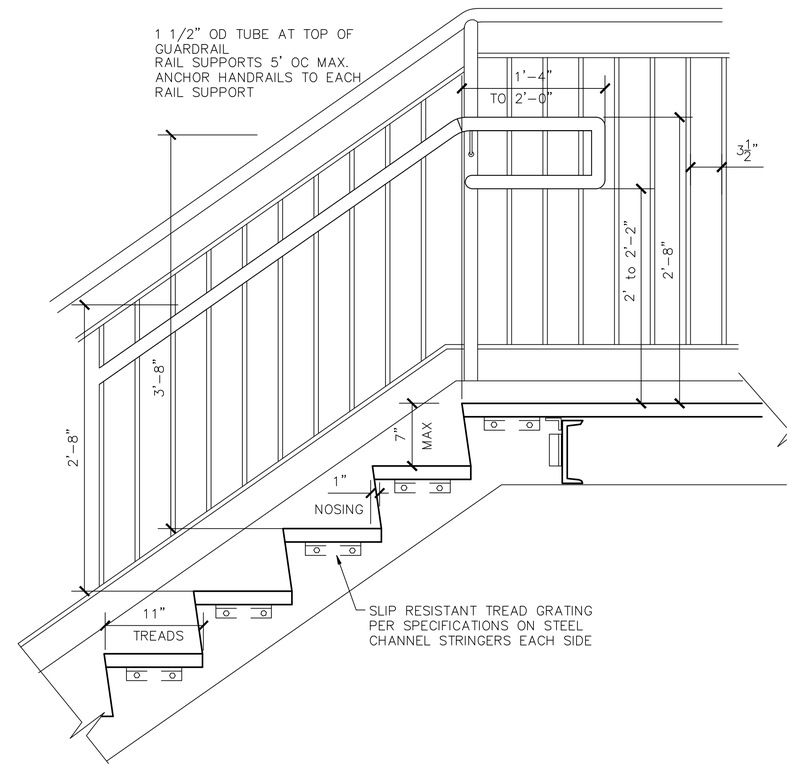

6 STAIR AT TOP LANDING

Scale: 1 1/2"=1'-0"

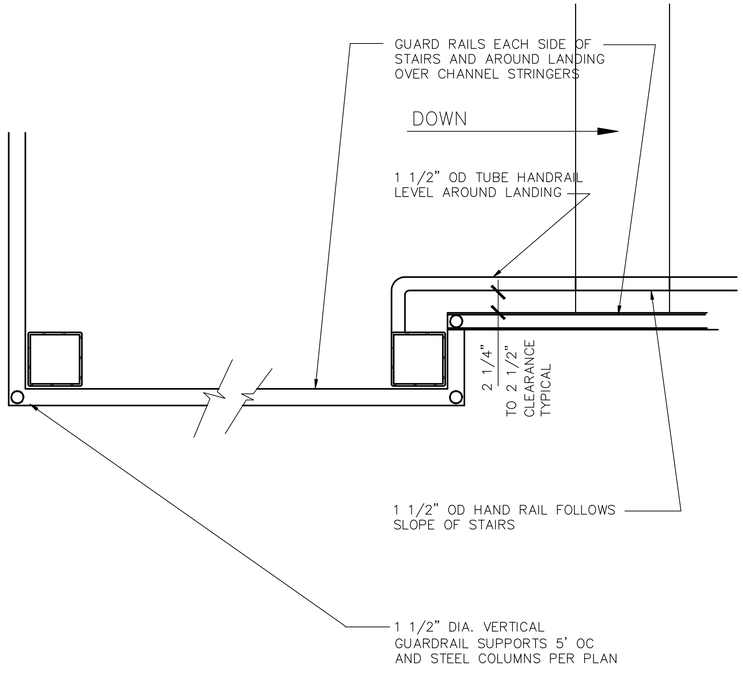

3 COLUMN DETAIL AT LANDING

Scale: 1 1/2"=1'-0"

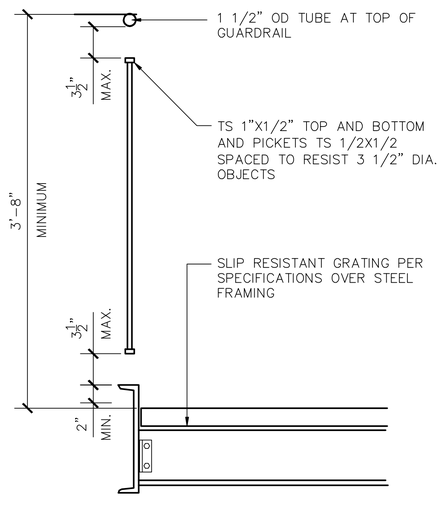

2 TYPICAL GUARD RAIL DETAIL

Scale: 1 1/2"=1'-0"

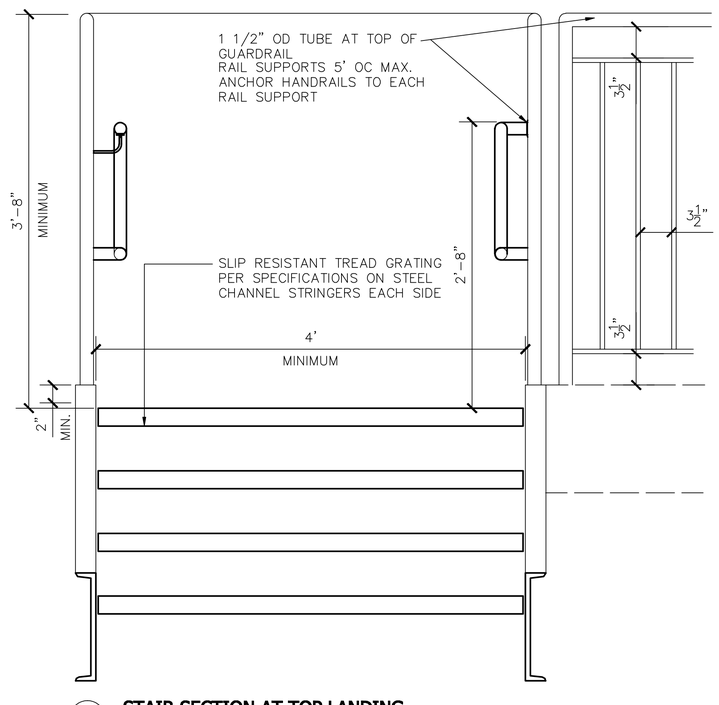

1 STAIR SECTION AT TOP LANDING

Scale: 1 1/2"=1'-0"

State of Tennessee
Department of Correction
Designer: Ronald J. LaFlamme
Ground Floor Rachel Jackson Building
320 Sixth Avenue North
Nashville, TN 37243-0465
615-741-1000 ext. 8228

TENNESSEE CORRECTION ACADEMEY
COOPER EXTERIOR STAIRS NORTH SIDE

DATE: 04/27/15

A-3

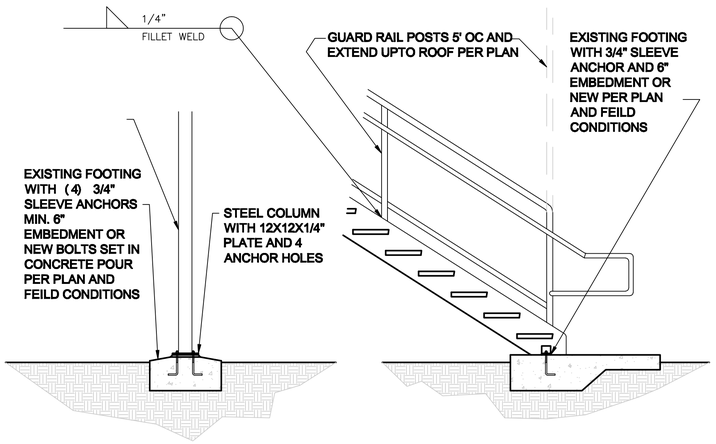

4 FOUNDATION DETAILS

NOT TO SCALE

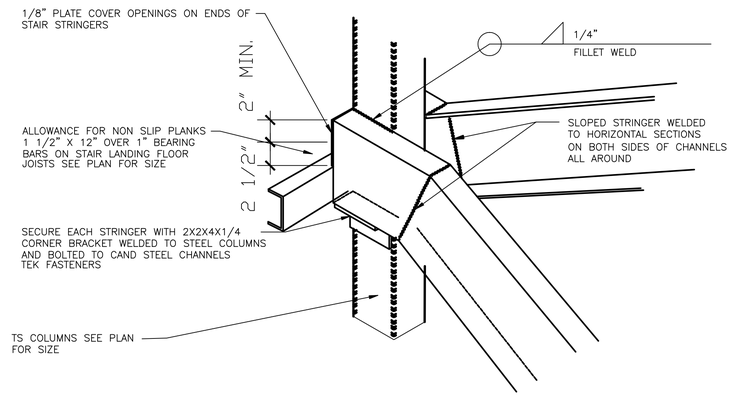

3 STRINGER TO COLUMN CONNECTION

NOT TO SCALE

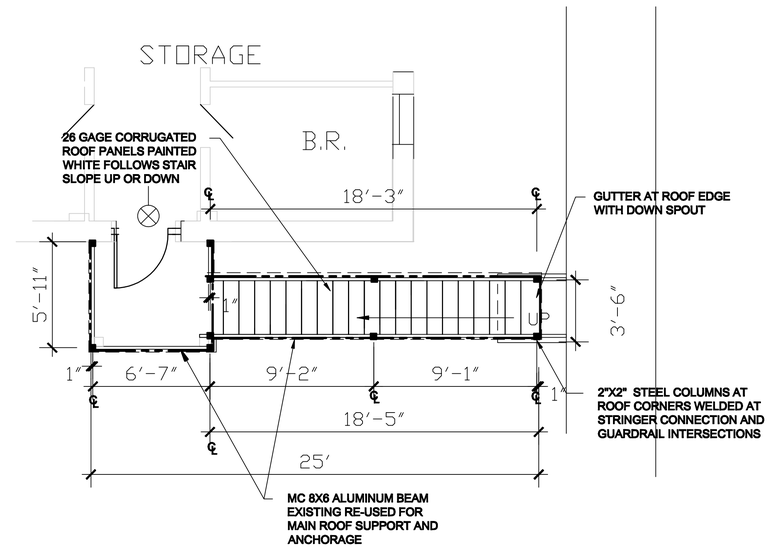

2 ROOF FRAMING NORTH STAIR

0 4' 8'

Scale: 1/4"=1'-0"

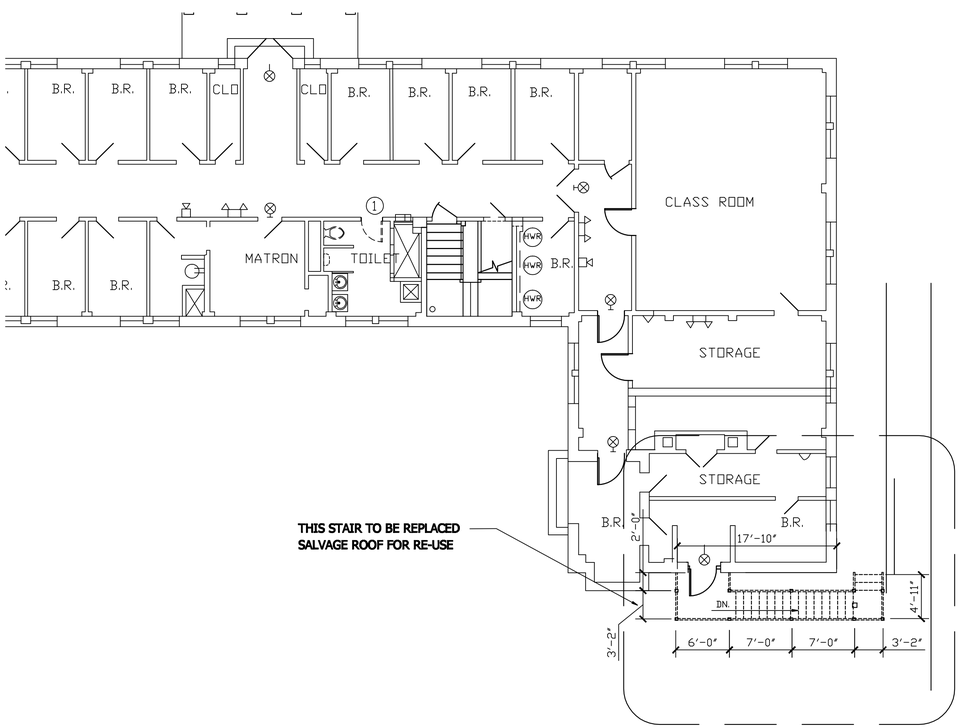

5 FIRST FLOOR BUILDING PLAN

0 8' 16'

Scale: 1/8"=1'-0"

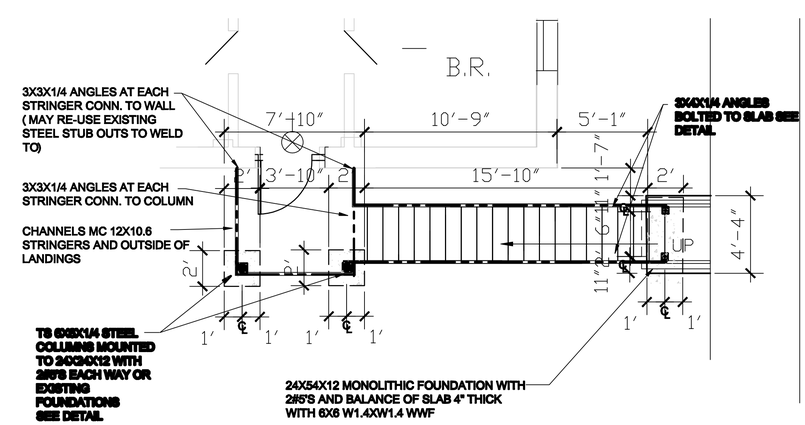

1 FOUNDATION PLAN NORTH STAIR

0 4' 8'

Scale: 1/4"=1'-0"

State of Tennessee
Department of Correction
Designer: Ronald J. LaFlamme
Ground Floor Rachel Jackson Building
320 Sixth Avenue North
Nashville, TN 37243-0465
615-741-1000 ext. 8228

TENNESSEE CORRECTION ACADEMEY
COOPER EXTERIOR STAIRS NORTH SIDE

DATE:
04/27/15

S-1