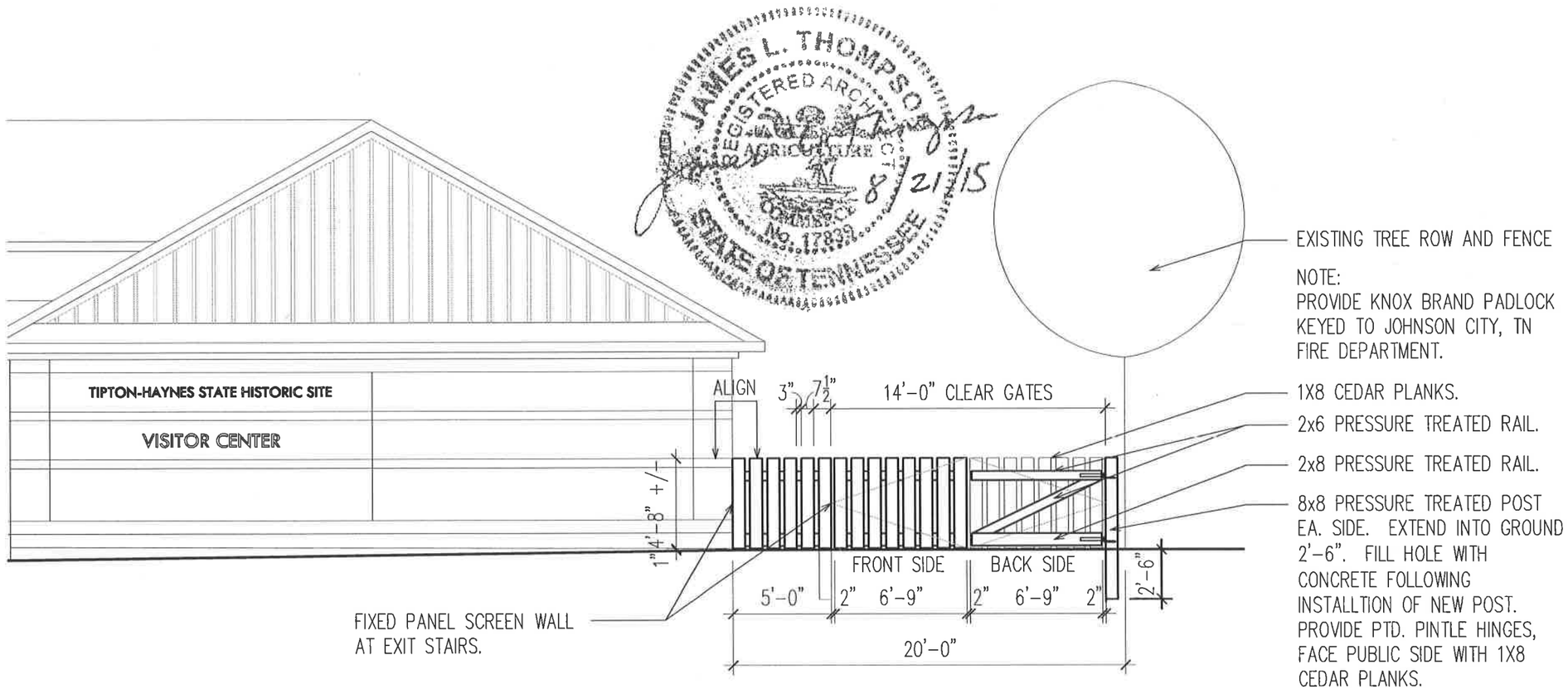

A VISITOR CENTER ENTRY GATES

0' 4' 8' 16'

Scale: 1/8" = 1'-0"

A2.5

Date Issued: 8-21-2015

Project #: 02031.58

TIPTON HAYNES

JOHNSON CITY, TN

CENTRIC
ARCHITECTURE
Respecting the Past + Defining the Future
35 PEABODY STREET, SUITE 305
NASHVILLE, TENNESSEE 37210
615.385.9600
www.centricarchitecture.com

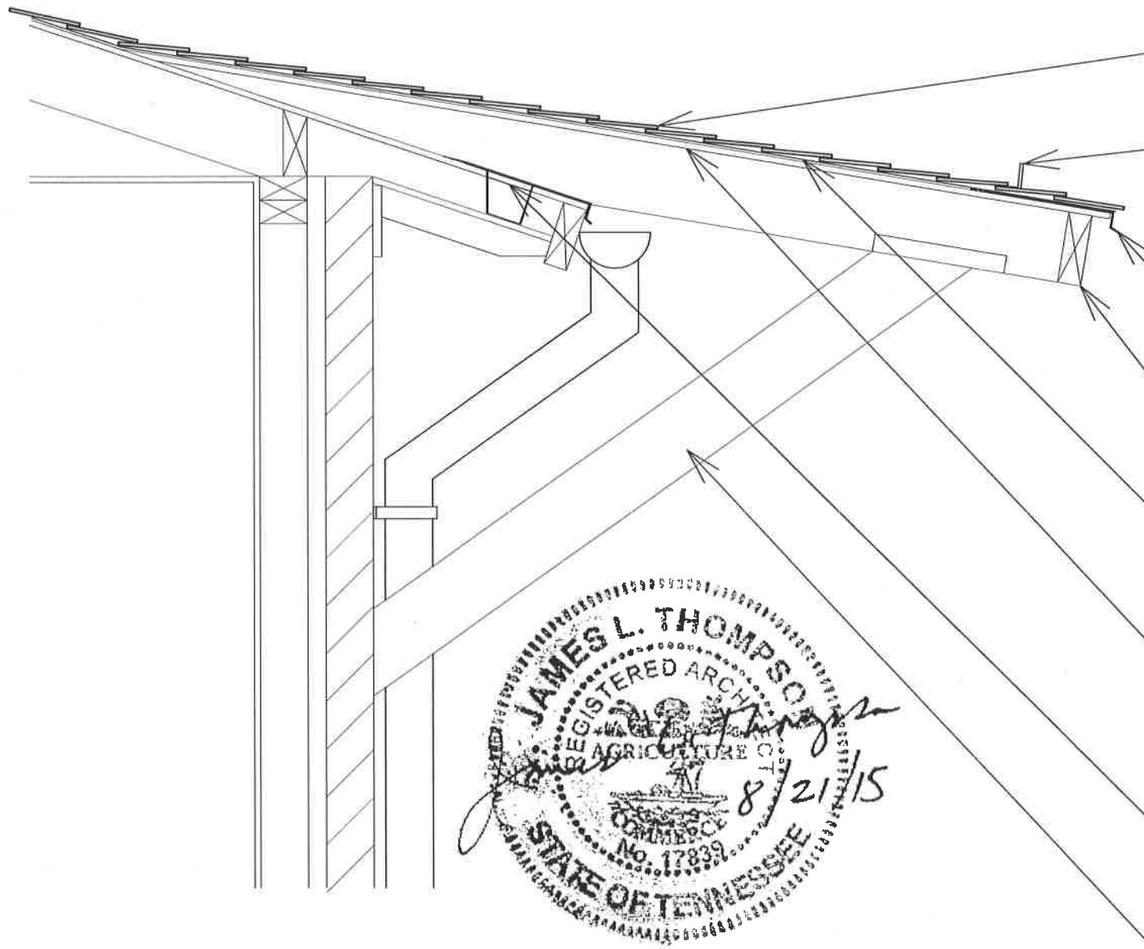

NEW ASPHALT SHINGLES.
MATCH EXISTING.

PVC RUNOFF DIVERTER ANGLE (3" X 3") FULL WIDTH OF "PORCH." PROJECT 1 INCH BEYOND SIDES OF "PORCH." MATCH SHINGLE COLOR

20 GAUGE PREFIN. ALUM. DRIP FLASHING AROUND PERIMTER OF "PORCH" ROOF.

REPLACE DETERIORATED WOOD FASCIA. MATCH EXISTING.

SELF-ADHERING UNDERLAYMENT. EXTEND UP ROOF 18 INCHES ABOVE SHED "PORCH" ROOF.

REPLACE ALL DETERIOATED WOOD DECKING AT PORCH ROOF EXTENSION. MATCH EXISTING.

SEE DRAWING A2.2 FOR REPAIRS TO EXISTING BUILT-IN GUTTER SYSTEM.

EXISTING WOOD KICKER/SUPPORT.

JAMES L. THOMPSON
REGISTERED ARCHITECT
STATE OF TENNESSEE
No. 17839
8/21/15

A SECTION AT PORCH ROOF EXTENSION

0' 6" 1' 2'

Scale: 3/4" = 1'-0"

A2.3

Date Issued: 8-21-2015

Project #: 02031.58

TIPTON HAYNES

JOHNSON CITY, TN

CENTRIC ARCHITECTURE
Respecting the Past + Defining the Future
35 PEABODY STREET, SUITE 305
NASHVILLE, TENNESSEE 37210
615.385.9600
www.centricarchitecture.com

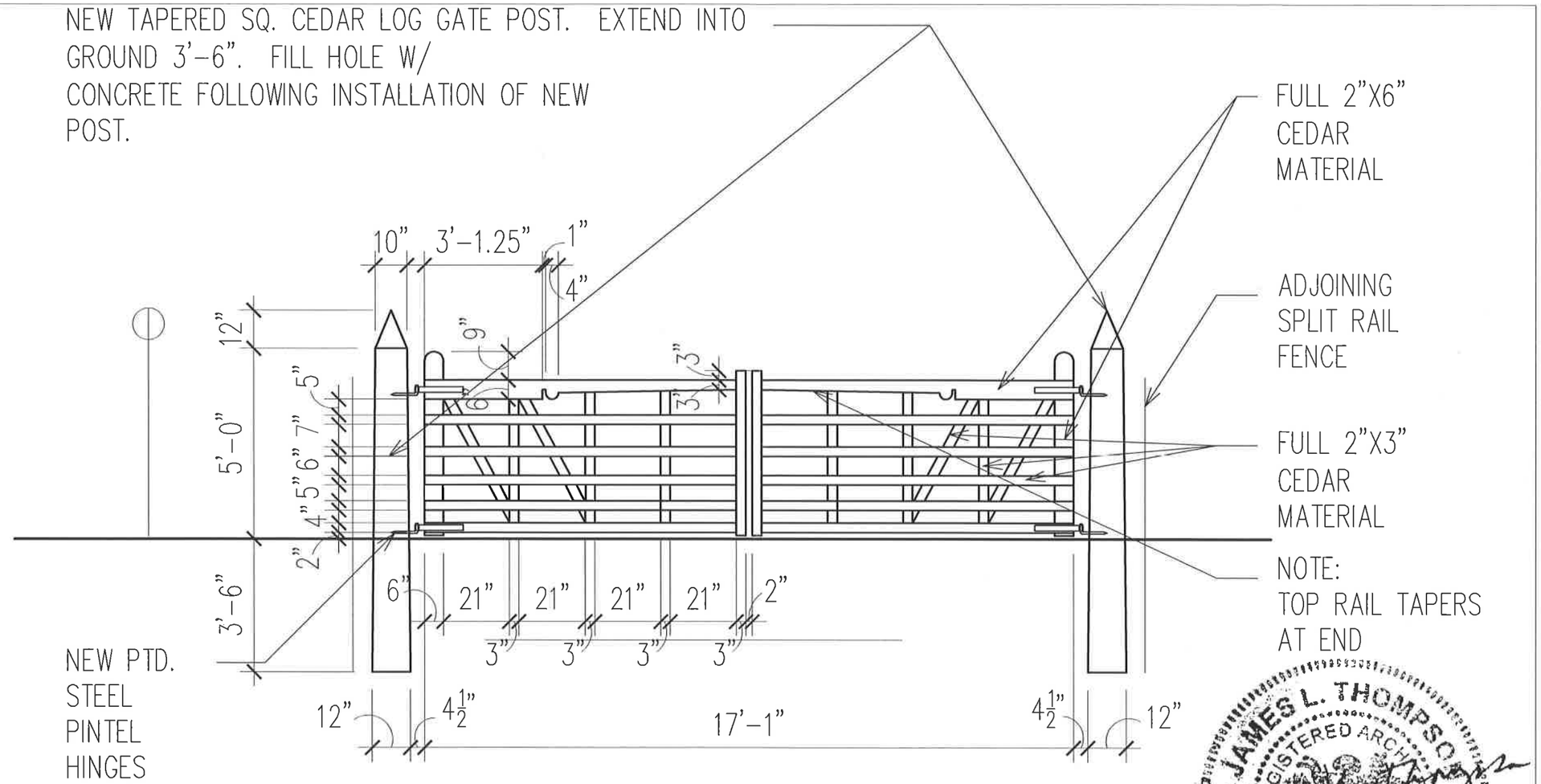

A SITE ENTRY GATES FROM BUFFALO ROAD

0 4' 8' 16'

Scale: 1/4" = 1'-0"

JAMES L. THOMPSON REGISTERED ARCHITECT DEPARTMENT OF AGRICULTURE COMMERCE No. 17839 STATE OF TENNESSEE

8/21/15

A2.4

Date Issued: 8-21-2015

Project #: 02031.58

TIPTON HAYNES

JOHNSON CITY, TN

CENTRIC ARCHITECTURE
Respecting the Past + Defining the Future
35 PEABODY STREET, SUITE 305
NASHVILLE, TENNESSEE 37210
615.385.9600
www.centricarchitecture.com

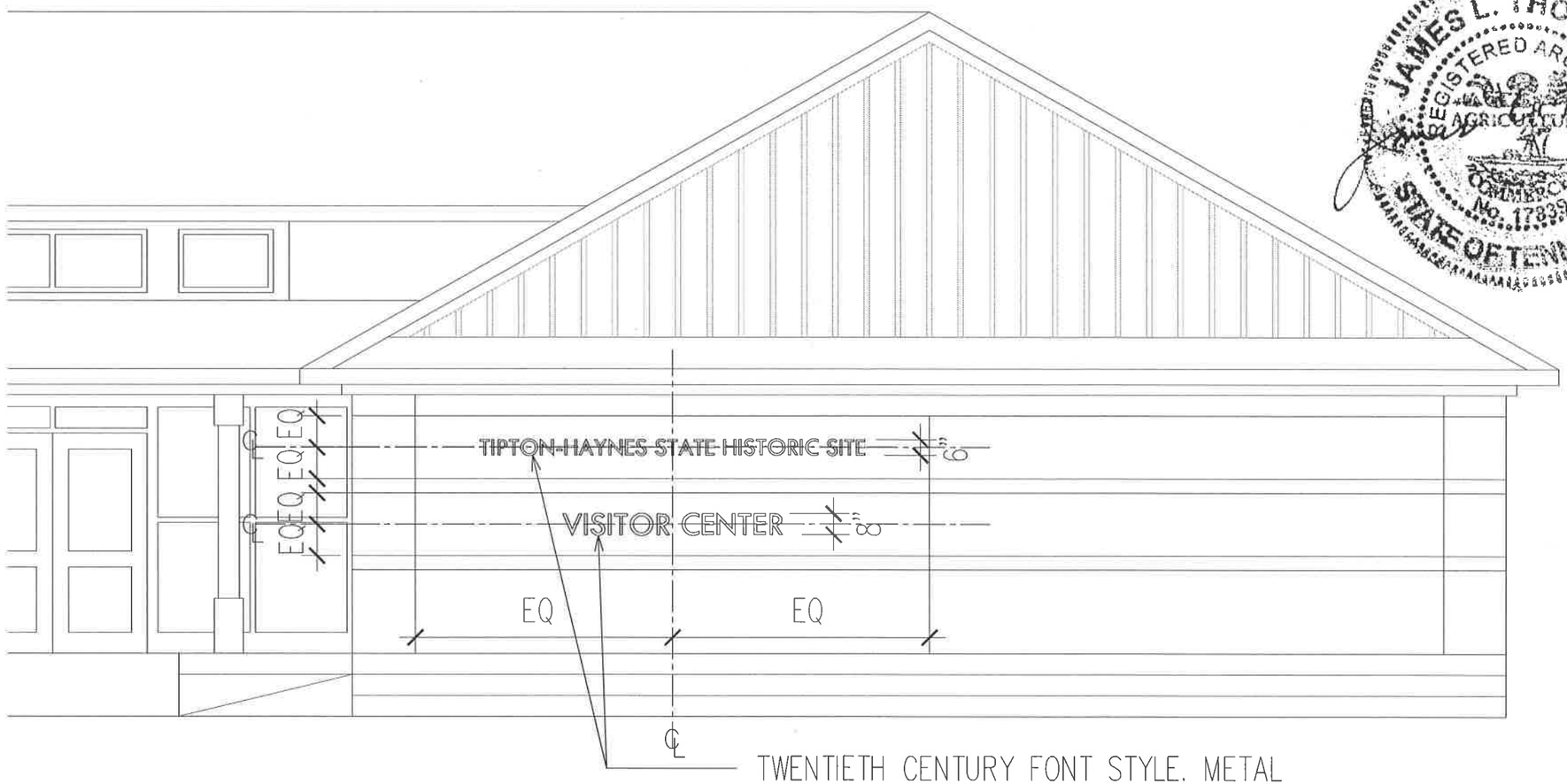

TWENTIETH CENTURY FONT STYLE. METAL LETTERS ON STANDOFFS. SEE SPECS FOR ADDITIONAL INFORMATION.

JAMES L. THOMPSON
REGISTERED ARCHITECT
No. 17339
STATE OF TENNESSEE
8/21/15

(A) VISITOR CENTER SIGN

0 2' 4' 8'

Scale: 3/16" = 1'-0"

A2.0

Date Issued: 8-21-2015

Project #: 02031.58

TIPTON HAYNES

JOHNSON CITY, TN

CENTRIC ARCHITECTURE
Respecting the Past + Defining the Future
35 PEABODY STREET, SUITE 305
NASHVILLE, TENNESSEE 37210
615.385.9600
www.centricarchitecture.com

THESE DOCUMENTS HAVE BEEN PREPARED SPECIFICALLY FOR THE PROJECT NAMED HEREIN. THEY ARE NOT SUITABLE FOR USE ON OTHER PROJECTS WITHOUT THE APPROVVAL AND PARTICIPATION OF THE DESIGN PROFESSIONAL. COPYRIGHT 2015, CENTRIC ARCHITECTURE.

JAMES L. THOMPSON
REGISTERED ARCHITECT
STATE OF TENNESSEE
No. 17839
8/21/15

REPLACE ASPHALT SHINGLES THESE AREAS TO ENSURE WATERTIGHT ROOF. REPLACE ROOF FELT AND SHINGLE RIDGE CAPS AS NEEDED. MATCH EXISTING SHINGLES.

REMOVE EXISTING WOOD SCREEN OVER ROOF "DRAINAGE DITCH" AND EX. ASPHALT SHINGLES WITHIN WORK AREA. INSTALL NEW ROOF CRICKET WITH NEW 2"X 6" RAFTERS 16" OC. (BRACE RAFTERS AS NEEDED). COVER WITH ¾" T & G EXTERIOR GRADE PLYWOOD, ROOF FELT AND MATCHING ASPHALT SHINGLES. FLASH AS NEEDED AT FIREPLACE CHIMNEY. MATCH EXISTING FLASHING MATERIALS.

RELOCATE EXISTING EXHAUST FAN ABOVE NEW ROOF CRICKET. EXTEND DUCTWOK BELOW ROOF AS NEEDED. MATCH EXISTING DUCTWORK. FLASH NEW FAN LOCATION AT ROOF PENETRATION AS NEEDED FOR WATERTIGHT CONDITION.

NEW ROOF CRICKET RIDGE.

REPLACE ASPHALT SHINGLES THESE AREAS TO ENSURE WATERTIGHT ROOF. REPLACE ROOF FELT AND SHINGLE CAPS AS NEEDED. MATCH EXISTING SHINGLES.

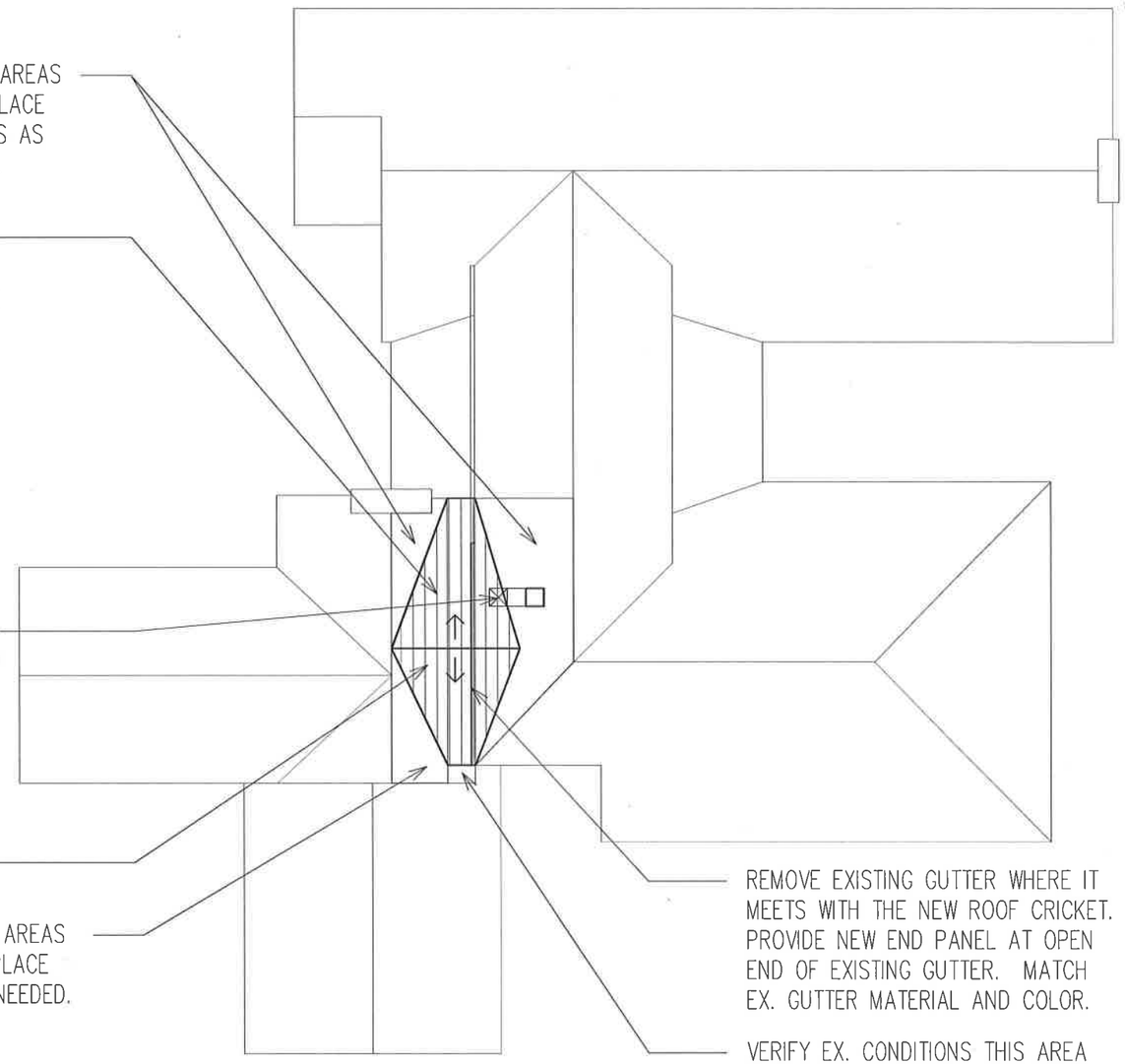

REMOVE EXISTING GUTTER WHERE IT MEETS WITH THE NEW ROOF CRICKET. PROVIDE NEW END PANEL AT OPEN END OF EXISTING GUTTER. MATCH EX. GUTTER MATERIAL AND COLOR.

VERIFY EX. CONDITIONS THIS AREA OF ROOF. MAINTAIN/MODIFY WATER REMOVAL SYSTEM THIS AREA AS NEEDED.

(A) VISITOR CENTER ROOF

0' 8' 16' 32'

Scale: 1/16" = 1'-0"

CENTRIC
ARCHITECTURE
Respecting the Past + Defining the Future
35 PEABODY STREET, SUITE 305
NASHVILLE, TENNESSEE
37210
615.385.9600
www.centricarchitecture.com

TIPTON HAYNES
JOHNSON CITY, TN

REVISIONS

A2.1

Date Issued:
8-21-2015

Project #:
02031.58

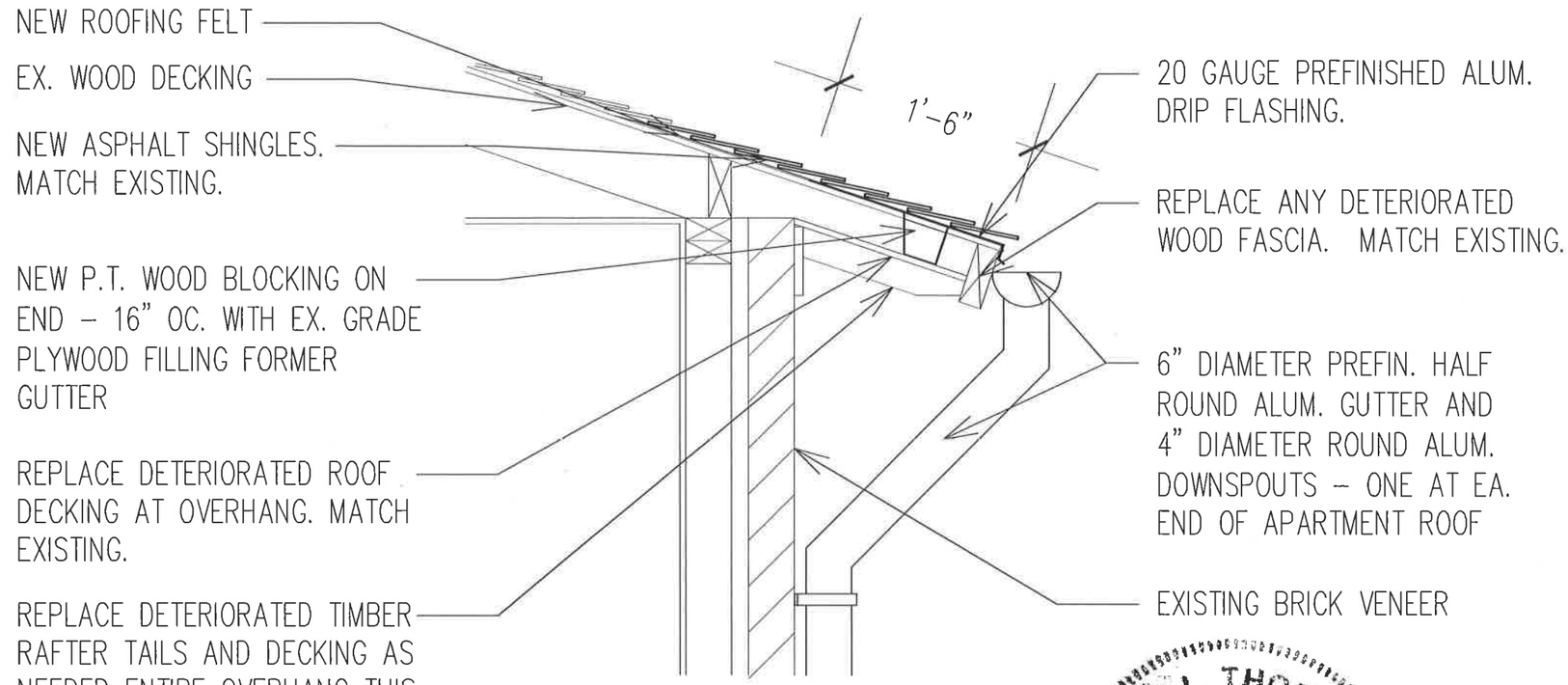

A SECTION AT BUILT-IN GUTTER

0' 6" 1' 2'

Scale: 3/4" = 1'-0"

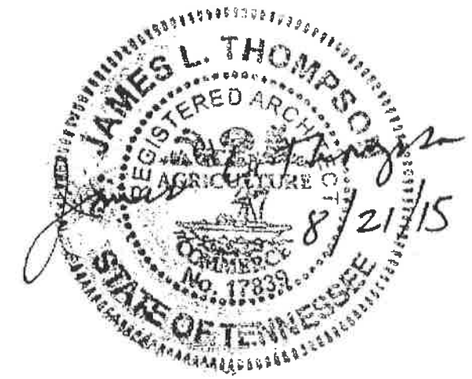

A2.2

Date Issued: 8-21-2015

Project #: 02031.58

TIPTON HAYNES

JOHNSON CITY, TN

CENTRIC ARCHITECTURE
Respecting the Past + Defining the Future
35 PEABODY STREET, SUITE 305
NASHVILLE, TENNESSEE 37210
615.385.9600
www.centricarchitecture.com