SPECIFICATIONS

LOADER BACKHOES/TRACTOR LOADER

- New Flip Up Hood for Easier Daily Maintenance
- Narrow Backhoe Boom Design for Optimal Visibility
- Outstanding Loader Bucket Breakout Forces

NEW HOLLAND CONSTRUCTION

B95C SPECIFICATIONS

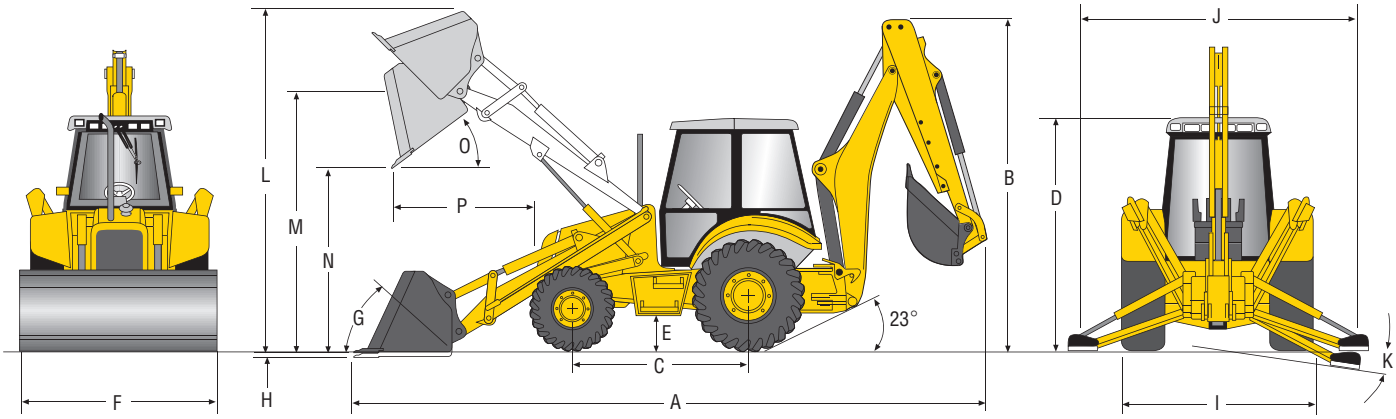

DIMENSIONS					
A.	Transport length, ft/in (mm)	23' 0" (7030)	**G.**	Bucket Rollback	
B.	Transport height, ft/in (mm)	12' 6" (3810)		At ground level	39°
C.	Wheelbase, in (mm)			Raised	50°
	2WD	85.6" (2175)	**H.**	Digging depth below grade, in (mm)	4" (100)
	4WD	85.6" (2175)	**I.**	Transport width, ft/in (mm)	7' 6" (2300)
D.	Height to top of cab, ft/in (mm)	9' 5" (2870)	**J.**	Stabilizer spread, operating, ft/in (mm)	10' 7" (3226)
E.	Ground Clearance, in (mm)	15.5" (394)	**K.**	Stabilizer spread, leveling angle	14°
F.	Blade width, ft/in (mm)	7' 5" (2250)			

LOADER DIMENSIONS		1.1 cu yd Heavy-Duty General Purpose
L.	Max operating height, ft/in (mm)	14' 0" (4276)
M.	Height to hinge pin, ft/in (mm)	11' 5" (3481)
N.	Dump height, ft/in (mm)	9' 2" (2784)
O.	Max dump angle	45°
P.	Reach @ 45 degree dump angle, ft/in (mm)	2' 5" (725)
	Max grading angle	116°

Unit equipped with 12-16.5 front tire, 19.5L-24 rear tire

LOADER PERFORMANCE	1.1 cu yd Heavy-Duty General Purpose
Linkage geometry	straight
Bucket breakout force, lbf (daN)	14,253 (6340)
Lift capacity to full height, lbs (kg)	11,118 (5043)
SAE heaped capacity, cu yd (m^3)	1.1 (.88)
SAE struck capacity, cu yd (m^3)	.91 (.73)
Bucket weight, lbs (kg)	682 (309)
Cutting width, in (mm)	88 (2250)
Cycle	
Raise to full height	4.4 sec
Dump time	1.2 sec
Lower	2.7 sec

WEIGHT	
Base Unit	16,008 lbs
With options added	
2WD	-386 lbs
Canopy	-397 lbs
4x1	+969 lbs
6x1	+1,408 lbs
Std. (counterweight)	-769 lbs
Med. (counterweight)	-239 lbs

TRANSMISSION	Power Shuttle	Powershift
Manufacturer	Carraro	Carraro
Transmission type	Sincromesh	Hydraulic clutch packs
Gear	4F/4R	4F/3R
Max Fwd travel speed, mph (kph)	23.8	23.2

ENGINE	
Make and model	FPT F5HFL413C*A
Type	Tier IV interim certified, electronic high pressure common rail, 4-cycle diesel
Aspiration	Turbocharged Aftercooled
Governed RPM	2500 RPM
Number of cylinders	4
Displacement, cu in (l)	207 (3.4)
Horsepower, gross, hp (kW)	97 (72)
Horsepower, net hp (kW)	95 (71)
Peak torque, lb-ft (N-m) @ RPM	334 (453) @ 1400

MANEUVERABILITY	Less Brakes	With Split Brakes
2WD curb clearance	13' 6"	12' 7"
4WD curb clearance	15' 9"	11' 5"
2WD bucket clearance	17' 9"	16' 8"
4WD bucket clearance	19' 5"	16' 6"

*4WD, CAB, HED, Heavy Duty Counterweight, STD Bucket

B95C SPECIFICATIONS

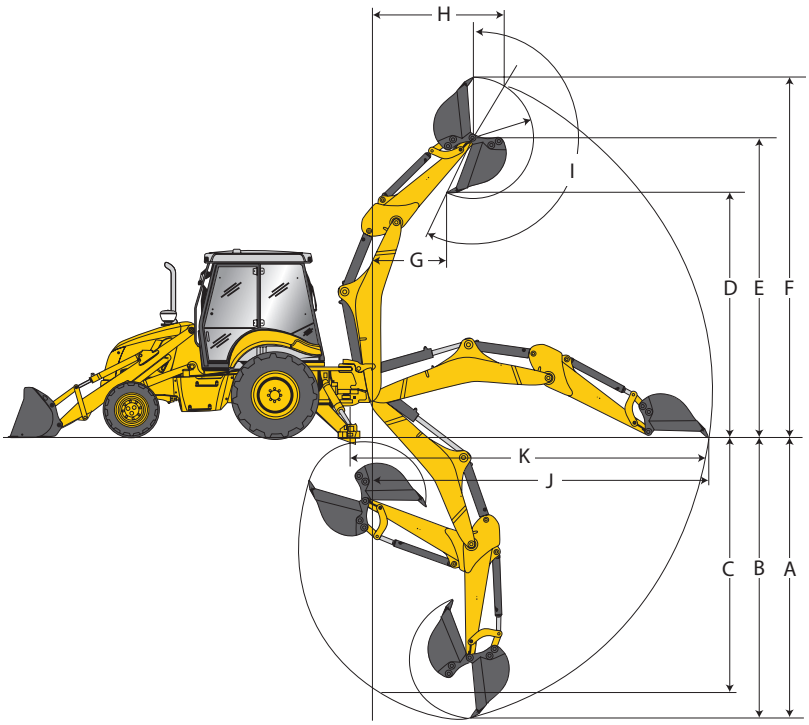

HYDRAULIC SYSTEM	
System type	Open center
Main pump type	Dual gear
Pump capacity gpm (lpm)	40 (151)
System relief pressure	3,045 psi

ELECTRICAL	
Alternator output	120 amps
Battery capacity (std/opt)	1,200/900 CCA

REFILL CAPACITIES	
Fuel tank, gal (l)	35.6 (135)
Cooling system, gal (l)	6.4 (24)
Engine oil, includes filter, gal (l)	3.7 (14)
Hydraulic tank, gal (l)	19.7 (75)
Hydraulic system, gal (l)	31 (118)

SWING	
Swing force	5,800 lbf-ft
Swing torque	20,390 lbf-ft

BACKHOE DIMENSIONS				
		Standard	**Retracted**	**Extended**
A	Max dig depth, ft/in (mm)	14' 6" (4426)	15' 1" (4586)	18' 5" (5623)
B	Dig depth, 2' flat bottom, ft/in (mm)	14' 5" (4398)	14' 11" (4556)	18' 4" (5589)
C	Dig depth, 8' flat bottom, ft/in (mm)	13' 3" (4034)	13' 10" (4206)	17' 5" (5310)
D	Loading Height, ft/in (mm)	11' 9" (3585)	12' 1" (3684)	14' 3" (4351)
E	Max pin height, ft/in (mm)	14' 10" (4513)	15' 2" (4613)	18' 8" (5698)
F	Max operating height, ft/in (mm)	17' 10" (5441)	18' 2" (5539)	20' 4" (6206)
G	Loading Reach @ max height, ft/in (mm)	4' 6" (1362)	5' 2" (1582)	7' 5" (2272)
H	Dig reach @ max height, ft/in (mm)	6' 8" (2040)	7' 3" (2208)	9' 11" (3019)
I	Bucket rotation (max)	203°	203°	203°
J	Reach from swing post, ft/in (mm)	17' 0" (5186)	17' 6" (5327)	20' 7" (6279)
K	Reach (overall), ft/in (mm)	17' 8" (5385)	18' 2" (5537)	21' 3" (6477)

CYLINDER SPECS	
Loader cylinder	3.54" bore x 28.6" stroke
Backhoe	
Boom cylinder	5" bore x 35.71" stroke
Arm cylinder	4.75" bore x 27.64" stroke
Bucket cylinder	3.3" bore x 30.16" stroke
Swing cylinder	4.33" bore x 9.38" stroke

SERVICE INTERVALS	
Engine oil	500 hours
Hydraulic oil filter	1,000 hours
Engine coolant	2,000 hours
Rear axle oil	1,000 hours

BACKHOE PERFORMANCE			
	Standard	**Retracted**	**Extended**
Bucket capacity, cu ft (m^3)	7.5 (.21)	7.5 (.21)	7.5 (.21)
Bucket digging force, lbs (kg)	12,933 (5866)	12,969 (5883)	12,969 (5883)
Crowd digging force, lbs (kg)	8,588 (3895)	8,100 (3674)	5782 (2623)
Boom lift @ -8 ft, lbs (kg)	3,025 (1370)	2,555 (1180)	2,180 (990)
Dipper lift @ +10 ft, lbs (kg)	5,990 (2715)	5,405 (2450)	3,730 (1690)

B95C TC SPECIFICATIONS

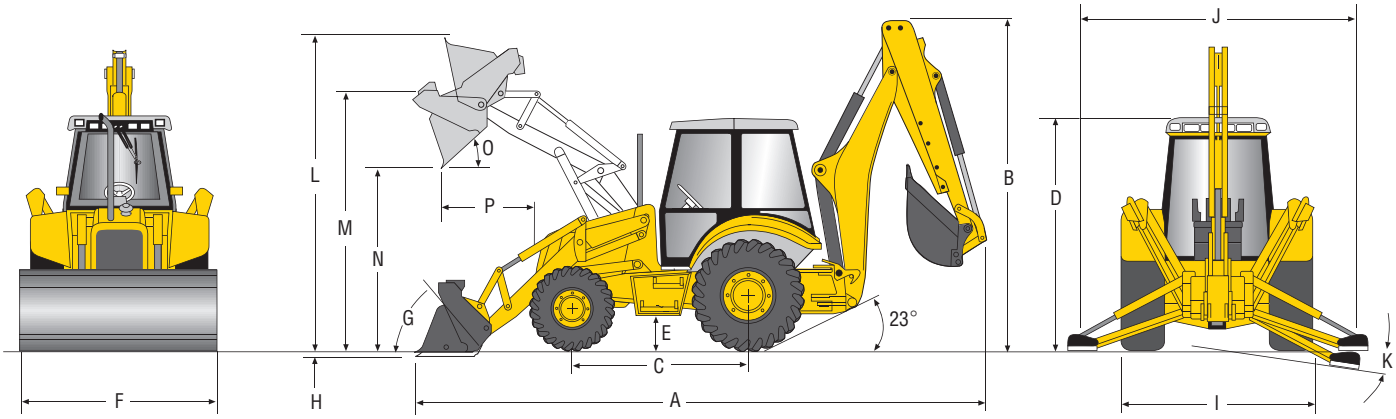

DIMENSIONS					
A.	Transport length, ft/in (mm)	24' 0" (7325)	**G.**	Bucket Rollback	
B.	Transport height, ft/in (mm)	12' 6" (3815)		At ground level	43°
C.	Wheelbase, in (mm)			Raised	Adjustable
	2WD	85.6" (2175)	**H.**	Digging depth below grade, in (mm)	5" (120)
	4WD	85.6" (2175)	**I.**	Transport width, ft/in (mm)	7' 6" (2300)
D.	Height to top of cab, ft/in (mm)	9' 5" (2870)	**J.**	Stabilizer spread, operating, ft/in (mm)	10' 7" (3226)
E.	Ground Clearance, in (mm)	15.5" (394)	**K.**	Stabilizer spread, leveling angle	14°
F.	Blade width, ft/in (mm)	7' 5" (2250)			

LOADER DIMENSIONS		1.3 cu yd Heavy-Duty General Purpose
L.	Max operating height, ft/in (mm)	13' 11" (4250)
M.	Height to hinge pin, ft/in (mm)	11' 4" (3458)
N.	Dump height, ft/in (mm)	10' 7" (3218)
O.	Max dump angle	45°
P.	Reach @ 45 degree dump angle, ft/in (mm)	2' 9" (829)
	Max grading angle	116°

Unit equipped with 12-16.5 front tire, 19.5L-24 rear tire

LOADER PERFORMANCE	1.3 cu yd Heavy-Duty General Purpose
Linkage geometry	curved
Bucket breakout force, lbf (daN)	14,712 (6544)
Lift capacity to full height, lbs (kg)	8,610 (3906)
SAE heaped capacity, cu yd (m^3)	1.3 (1.0)
SAE struck capacity, cu yd (m^3)	1.1 (.82)
Bucket weight, lbs (kg)	880 (399)
Cutting width, in (mm)	89 (2250)
Cycle	
Raise to full height	4.4 sec
Dump time	1.2 sec
Lower	2.7 sec

WEIGHT	
Base Unit	18,135 lbs
With options added	
2WD	-386 lbs
Canopy	-397 lbs
4x1	+770 lbs
6x1	+1,810 lbs
Std. (counterweight)	-769 lbs
Med. (counterweight)	-239 lbs

TRANSMISSION	Power Shuttle	Powershift
Manufacturer	Carraro	Carraro
Transmission type	Sincromesh	Hydraulic clutch packs
Gear	4F/4R	4F/3R
Max Fwd travel speed, mph (kph)	23.8	23.2

ENGINE	
Make and model	FPT F5HFL413B*A
Type	Tier IV interim certified, electronic high pressure common rail, 4-cycle diesel
Aspiration	Turbocharged Aftercooled
Governed RPM	2500 RPM
Number of cylinders	4
Displacement, cu in (l)	207 (3.4)
Horsepower, gross, hp (kW)	97 (72)
Horsepower, net hp (kW)	95 (71)
Peak torque, lb-ft (N-m) @ RPM	334 (453) @ 1400

MANEUVERABILITY	Less Brakes	With Split Brakes
2WD curb clearance	13' 6"	12' 7"
4WD curb clearance	15' 9"	11' 5"
2WD bucket clearance	17' 9"	16' 8"
4WD bucket clearance	19' 5"	16' 6"

*4WD, CAB, HED, Heavy Duty Counterweight, STD Bucket

B95C TC SPECIFICATIONS

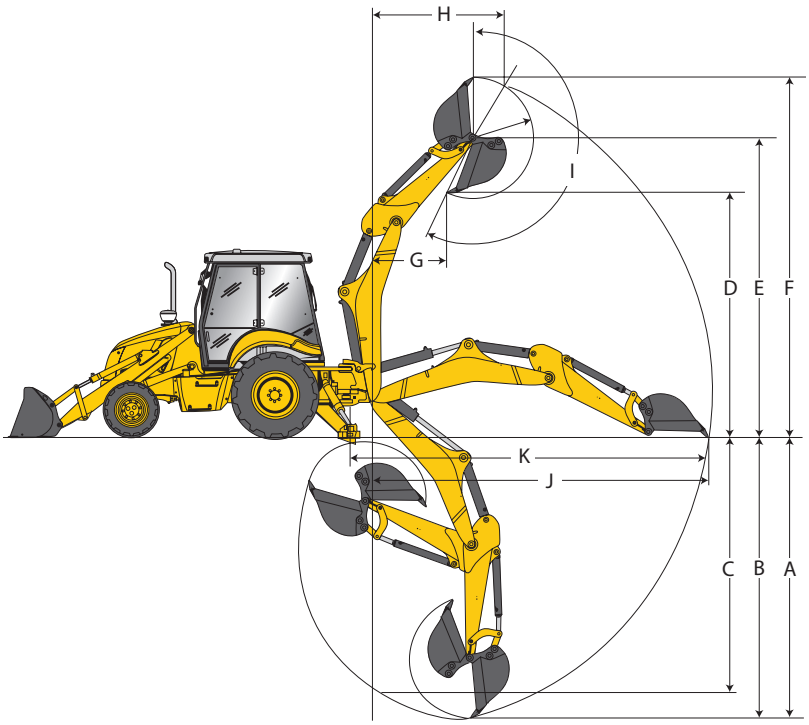

HYDRAULIC SYSTEM	
System type	Open center
Main pump type	Dual gear
Pump capacity gpm (lpm)	40 (151)
System relief pressure	3,045 psi

ELECTRICAL	
Alternator output	120 amps
Battery capacity (std/opt)	1,200/900 CCA

REFILL CAPACITIES	
Fuel tank, gal (l)	35.6 (135)
Cooling system, gal (l)	6.4 (24)
Engine oil, includes filter, gal (l)	3.7 (14)
Hydraulic tank, gal (l)	19.7 (75)
Hydraulic system, gal (l)	31 (118)

SWING	
Swing force	5,800 lbf-ft
Swing torque	20,901 lbf-ft

BACKHOE DIMENSIONS				
		Standard	**Retracted**	**Extended**
A	Max dig depth, ft/in (mm)	14' 6" (4426)	15' 1" (4586)	18' 5" (5623)
B	Dig depth, 2' flat bottom, ft/in (mm)	14' 5" (4398)	14' 11" (4556)	18' 4" (5589)
C	Dig depth, 8' flat bottom, ft/in (mm)	13' 3" (4034)	13' 10" (4206)	17' 5" (5310)
D	Loading Height, ft/in (mm)	11' 9" (3585)	12' 1" (3684)	14' 3" (4351)
E	Max pin height, ft/in (mm)	14' 10" (4513)	15' 2" (4613)	18' 8" (5698)
F	Max operating height, ft/in (mm)	17' 10" (5441)	18' 2" (5539)	20' 4" (6206)
G	Loading Reach @ max height, ft/in (mm)	4' 6" (1362)	5' 2" (1582)	7' 5" (2272)
H	Dig reach @ max height, ft/in (mm)	6' 8" (2040)	7' 3" (2208)	9' 11" (3019)
I	Bucket rotation (max)	203°	203°	203°
J	Reach from swing post, ft/in (mm)	17' 0" (5186)	17' 6" (5327)	20' 7" (6279)
K	Reach (overall), ft/in (mm)	17' 8" (5385)	18' 2" (5537)	21' 3" (6477)

CYLINDER SPECS	
Loader cylinder	3.54" bore x 28.6" stroke
Backhoe	
Boom cylinder	5" bore x 35.71" stroke
Arm cylinder	4.75" bore x 27.64" stroke
Bucket cylinder	3.3" bore x 30.16" stroke
Swing cylinder	4.33" bore x 9.38" stroke

SERVICE INTERVALS	
Engine oil	500 hours
Hydraulic oil filter	1,000 hours
Engine coolant	2,000 hours
Rear axle oil	1,000 hours

BACKHOE PERFORMANCE			
	Standard	**Retracted**	**Extended**
Bucket capacity, cu ft (m^3)	7.5 (.21)	7.5 (.21)	7.5 (.21)
Bucket digging force, lbs (kg)	12,933 (5866)	12,969 (5883)	12,969 (5883)
Crowd digging force, lbs (kg)	8,588 (3895)	8,100 (3674)	5782 (2623)
Boom lift @ -8 ft, lbs (kg)	3,025 (1370)	2,555 (1180)	2,180 (990)
Dipper lift @ +10 ft, lbs (kg)	5,990 (2715)	5,405 (2450)	3,730 (1690)

B95C LR SPECIFICATIONS

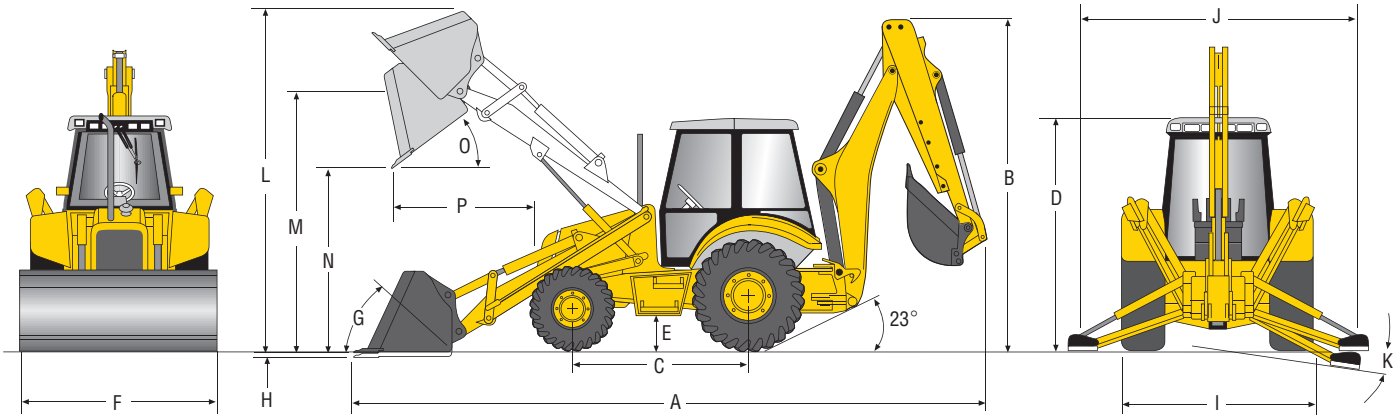

DIMENSIONS					
A.	Transport length, ft/in (mm)	23' 0" (7030)	**G.**	Bucket Rollback	
B.	Transport height, ft/in (mm)	12' 6" (3810)		At ground level	39°
C.	Wheelbase, in (mm)			Raised	50°
	2WD	85.6" (2175)	**H.**	Digging depth below grade, in (mm)	4" (100)
	4WD	85.6" (2175)	**I.**	Transport width, ft/in (mm)	7' 6" (2300)
D.	Height to top of cab, ft/in (mm)	9' 5" (2870)	**J.**	Stabilizer spread, operating, ft/in (mm)	10' 7" (3226)
E.	Ground Clearance, in (mm)	15.5" (394)	**K.**	Stabilizer spread, leveling angle	14°
F.	Blade width, ft/in (mm)	7' 5" (2250)			

LOADER DIMENSIONS		1.1 cu yd Heavy-Duty General Purpose
L.	Max operating height, ft/in (mm)	14' 0" (4276)
M.	Height to hinge pin, ft/in (mm)	11' 5" (3481)
N.	Dump height, ft/in (mm)	9' 2" (2784)
O.	Max dump angle	45°
P.	Reach @ 45 degree dump angle, ft/in (mm)	2' 5" (725)
	Max grading angle	116°

Unit equipped with 12-16.5 front tire, 19.5L-24 rear tire

LOADER PERFORMANCE	1.1 cu yd Heavy-Duty General Purpose
Linkage geometry	straight
Bucket breakout force, lbf (daN)	14,253 (6340)
Lift capacity to full height, lbs (kg)	11,118 (5043)
SAE heaped capacity, cu yd (m^3)	1.1 (.88)
SAE struck capacity, cu yd (m^3)	.91 (.73)
Bucket weight, lbs (kg)	682 (309)
Cutting width, in (mm)	88 (2250)
Cycle	
Raise to full height	4.4 sec
Dump time	1.2 sec
Lower	2.7 sec

WEIGHT	
Base Unit	16,008 lbs
With options added	
2WD	-386 lbs
Canopy	-397 lbs
4x1	+969 lbs
6x1	+1,408 lbs
Std. (counterweight)	-769 lbs
Med. (counterweight)	-239 lbs

TRANSMISSION	Power Shuttle	Powershift
Manufacturer	Carraro	Carraro
Transmission type	Sincromesh	Hydraulic clutch packs
Gear	4F/4R	4F/3R
Max Fwd travel speed, mph (kph)	23.8	23.2

ENGINE	
Make and model	FPT F5HFL413C*A
Type	Tier IV interim certified, electronic high pressure common rail, 4-cycle diesel
Aspiration	Turbocharged Aftercooled
Governed RPM	2500 RPM
Number of cylinders	4
Displacement, cu in (l)	207 (3.4)
Horsepower, gross, hp (kW)	97 (72)
Horsepower, net hp (kW)	95 (71)
Peak torque, lb-ft (N-m) @ RPM	334 (453) @ 1400

MANEUVERABILITY	Less Brakes	With Split Brakes
2WD curb clearance	13' 6"	12' 7"
4WD curb clearance	15' 9"	11' 5"
2WD bucket clearance	17' 9"	16' 8"
4WD bucket clearance	19' 5"	16' 6"

*4WD, CAB, HED, Heavy Duty Counterweight, STD Bucket

B95C LR SPECIFICATIONS

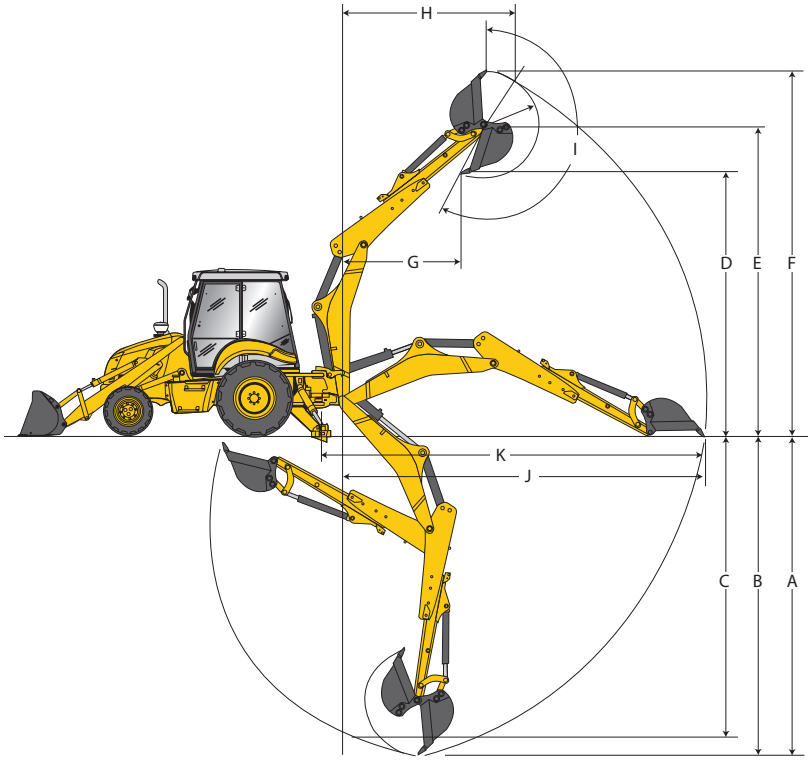

HYDRAULIC SYSTEM	
System type	Open center
Main pump type	Dual gear
Pump capacity gpm (lpm)	40 (151)
System relief pressure	3,045 psi

ELECTRICAL	
Alternator output	120 amps
Battery capacity (std/opt)	1,200/900 CCA

REFILL CAPACITIES	
Fuel tank, gal (l)	35.6 (135)
Cooling system, gal (l)	6.4 (24)
Engine oil, includes filter, gal (l)	3.7 (14)
Hydraulic tank, gal (l)	19.7 (75)
Hydraulic system, gal (l)	31 (118)

SWING	
Swing force	5,800 lbf-ft
Swing torque	20,901 lbf-ft

BACKHOE DIMENSIONS				
		Standard	Retracted	Extended
A	Max dig depth, ft/in (mm)	15' 6" (4727)	15' 6" (4727)	18' 11" (5770)
B	Dig depth, 2' flat bottom, ft/in (mm)	15' 5" (4695)	15' 5" (4695)	18 '10" (5735)
C	Dig depth, 8' flat bottom, ft/in (mm)	14' 4" (4364)	14' 4" (4364)	17' 11" (5463)
D	Loading Height, ft/in (mm)	12' 4" (3768)	12' 4" (3768)	14' 6" (4431)
E	Max pin height, ft/in (mm)	16' 4" (4969)	15' 5" (4698)	17' 7" (5359)
F	Max operating height, ft/in (mm)	18' 5" (5624)	18' 6" (5625)	20' 7" (6285)
G	Loading Reach @ max height, ft/in (mm)	5' 4" (1615)	5' 2" (1582)	7' 10" (2398)
H	Dig reach @ max height, ft/in (mm)	7' 6" (2294)	7' 8" (2341)	10' 4" (3157)
I	Bucket rotation (max)	203°	203°	203°
J	Reach from swing post, ft/in (mm)	17' 11" (5450)	17' 11" (5456)	21' 0" (6409)
K	Reach (overall), ft/in (mm)	18' 7" (5664)	18' 10" (5740)	21' 8" (6604)

CYLINDER SPECS	
Loader cylinder	3.54" bore x 28.6" stroke
Backhoe	
Boom cylinder	5" bore x 35.71" stroke
Arm cylinder	4.75" bore x 27.64" stroke
Bucket cylinder	3.3" bore x 30.16" stroke
Swing cylinder	4.33" bore x 9.38" stroke

SERVICE INTERVALS	
Engine oil	500 hours
Hydraulic oil filter	1,000 hours
Engine coolant	2,000 hours
Rear axle oil	1,000 hours

BACKHOE PERFORMANCE			
	Standard	Retracted	Extended
Bucket capacity, cu ft (m^3)	8.5 (.24)	8.5 (.24)	8.5 (.24)
Bucket digging force, lbs (kg)	12,969 (5883)	12,969 (5883)	12,969 (5883)
Crowd digging force, lbs (kg)	8,520 (3868)	8,483 (3848)	6032 (2736)
Boom lift @ -8 ft, lbs (kg)	3,380 (1530)	3,000 (1360)	2,485 (1125)
Dipper lift @ +10 ft, lbs (kg)	6,275 (2845)	5,995 (2720)	4,080 (1850)

B110C SPECIFICATIONS

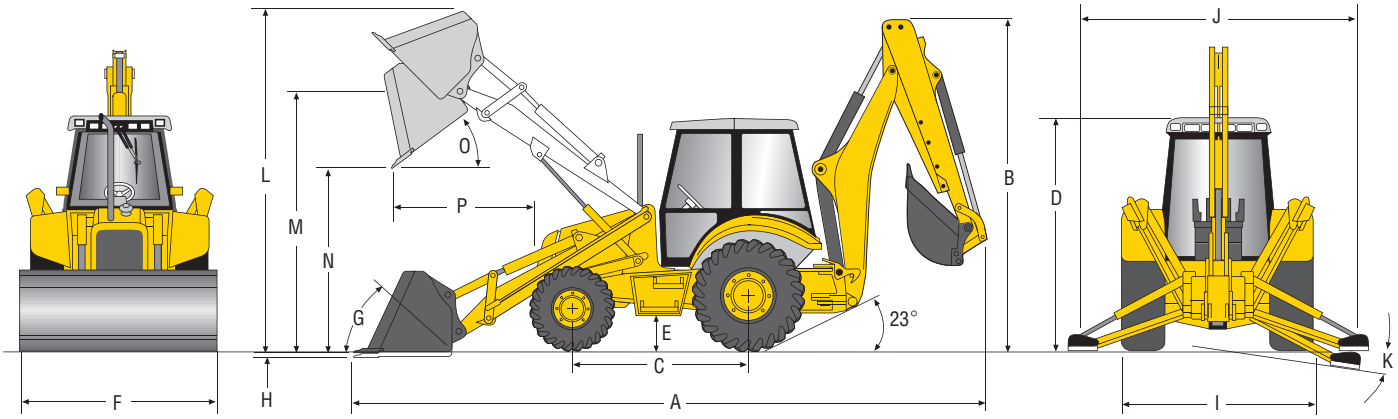

DIMENSIONS					
A.	Transport length, ft/in (mm)	23' 0" (7030)	**G.**	Bucket Rollback	
B.	Transport height, ft/in (mm)	12' 6" (3815)		At ground level	39°
C.	Wheelbase, in (mm)			Raised	48°
	2WD	85.6" (2175)	**H.**	Digging depth below grade, in (mm)	4" (100)
	4WD	85.6" (2175)	**I.**	Transport width, ft/in (mm)	7' 6" (2300)
D.	Height to top of cab, ft/in (mm)	9' 5" (2870)	**J.**	Stabilizer spread, operating, ft/in (mm)	10' 7" (3226)
E.	Ground Clearance, in (mm)	15.5" (394)	**K.**	Stabilizer spread, leveling angle	14°
F.	Blade width, ft/in (mm)	7' 5" (2250)			

LOADER DIMENSIONS		1.1 cu yd Heavy-Duty General Purpose
L.	Max operating height, ft/in (mm)	14' 2" (4309)
M.	Height to hinge pin, ft/in (mm)	11' 5" (3481)
N.	Dump height, ft/in (mm)	9' 2" (2784)
O.	Max dump angle	45°
P.	Reach @ 45 degree dump angle, ft/in (mm)	2' 4" (706)
	Max grading angle	116°

Unit equipped with 12-16.5 front tire, 19.5L-24 rear tire

LOADER PERFORMANCE	1.3 cu yd Heavy-Duty General Purpose
Linkage geometry	straight
Bucket breakout force, lbf (daN)	14,253 (6340)
Lift capacity to full height, lbs (kg)	10,957 (4970)
SAE heaped capacity, cu yd (m^3)	1.3 (1.0)
SAE struck capacity, cu yd (m^3)	1.1 (.82)
Bucket weight, lbs (kg)	880 (399)
Cutting width, in (mm)	89 (2250)
Cycle	
Raise to full height	4.4 sec
Dump time	1.2 sec
Lower	2.7 sec

WEIGHT	
Base Unit	16,008 lbs
With options added	
2WD	-386 lbs
Canopy	-397 lbs
4x1	+969 lbs
6x1	+1,408 lbs
Std. (counterweight)	-769 lbs
Med. (counterweight)	-239 lbs

TRANSMISSION	Power Shuttle	Powershift
Manufacturer	Carraro	Carraro
Transmission type	Sincromesh	Hydraulic clutch packs
Gear	4F/4R	4F/3R
Max Fwd travel speed, mph (kph)	23.8	23.2

ENGINE	
Make and model	FPT F5HFL413B*A
Type	Tier IV interim certified, electronic high pressure common rail, 4-cycle diesel
Aspiration	Turbocharged Aftercooled
Governed RPM	2500 RPM
Number of cylinders	4
Displacement, cu in (l)	207 (3.4)
Horsepower, gross, hp (kW)	110 (82)
Horsepower, net hp (kW)	108 (81)
Peak torque, lb-ft (N-m) @ RPM	339 (460) @ 1400

MANEUVERABILITY	Less Brakes	With Split Brakes
2WD curb clearance	13' 6"	12' 7"
4WD curb clearance	15' 9"	11' 5"
2WD bucket clearance	17' 9"	16' 8"
4WD bucket clearance	19' 5"	16' 6"

*4WD, CAB, HED, Heavy Duty Counterweight, STD Bucket

B110C SPECIFICATIONS

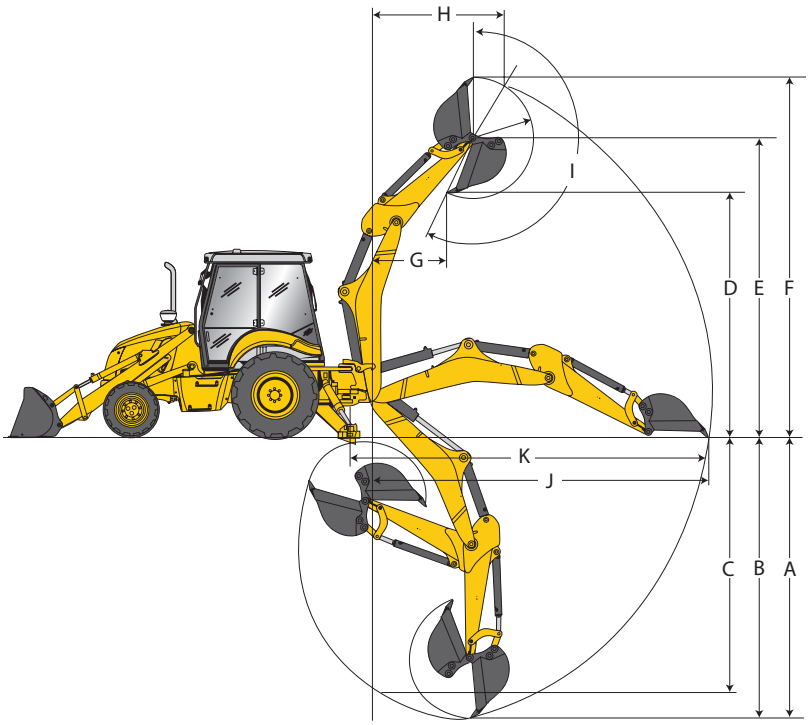

HYDRAULIC SYSTEM	
System type	Open center
Main pump type	Dual gear
Pump capacity gpm (lpm)	40 (151)
System relief pressure	3,045 psi

ELECTRICAL	
Alternator output	120 amps
Battery capacity (std/opt)	1,200/900 CCA

REFILL CAPACITIES	
Fuel tank, gal (l)	35.6 (135)
Cooling system, gal (l)	6.4 (24)
Engine oil, includes filter, gal (l)	3.7 (14)
Hydraulic tank, gal (l)	19.7 (75)
Hydraulic system, gal (l)	31 (118)

SWING	
Swing force	5,800 lbf-ft
Swing torque	20,901 lbf-ft

BACKHOE DIMENSIONS				
		Standard	Retracted	Extended
A	Max dig depth, ft/in (mm)	15' 6" (4727)	15' 6" (4727)	18' 11" (5770)
B	Dig depth, 2' flat bottom, ft/in (mm)	15' 5" (4695)	15' 5" (4695)	18 '10" (5735)
C	Dig depth, 8' flat bottom, ft/in (mm)	14' 4" (4364)	14' 4" (4364)	17' 11" (5463)
D	Loading Height, ft/in (mm)	12' 4" (3768)	12' 4" (3768)	14' 6" (4431)
E	Max pin height, ft/in (mm)	16' 4" (4969)	15' 5" (4698)	17' 7" (5359)
F	Max operating height, ft/in (mm)	18' 5" (5624)	18' 6" (5625)	20' 7" (6285)
G	Loading Reach @ max height, ft/in (mm)	5' 4" (1615)	5' 2" (1582)	7' 10" (2398)
H	Dig reach @ max height, ft/in (mm)	7' 6" (2294)	7' 8" (2341)	10' 4" (3157)
I	Bucket rotation (max)	203°	203°	203°
J	Reach from swing post, ft/in (mm)	17' 11" (5450)	17' 11" (5456)	21' 0" (6409)
K	Reach (overall), ft/in (mm)	18' 7" (5664)	18' 10" (5740)	21' 8" (6604)

CYLINDER SPECS	
Loader cylinder	3.54" bore x 28.6" stroke
Backhoe	
Boom cylinder	5" bore x 35.71" stroke
Arm cylinder	4.75" bore x 27.64" stroke
Bucket cylinder	3.3" bore x 30.16" stroke
Swing cylinder	4.33" bore x 9.38" stroke

SERVICE INTERVALS	
Engine oil	500 hours
Hydraulic oil filter	1,000 hours
Engine coolant	2,000 hours
Rear axle oil	1,000 hours

BACKHOE PERFORMANCE			
	Standard	Retracted	Extended
Bucket capacity, cu ft (m^3)	8.5 (.24)	8.5 (.24)	8.5 (.24)
Bucket digging force, lbs (kg)	12,969 (5883)	12,969 (5883)	12,969 (5883)
Crowd digging force, lbs (kg)	8,520 (3868)	8,483 (3848)	6032 (2736)
Boom lift @ -8 ft, lbs (kg)	3,380 (1530)	3,000 (1360)	2,485 (1125)
Dipper lift @ +10 ft, lbs (kg)	6,275 (2845)	5,995 (2720)	4,080 (1850)

B95C B95C TC LIFT CAPACITIES

LIFT CAPACITIES

BACKHOE BOOM AND SHORT BACKHOE DIPPER WITH HD BACKHOE BUCKET
610 mm (156 kg) / Loader Bucket 6 x 1

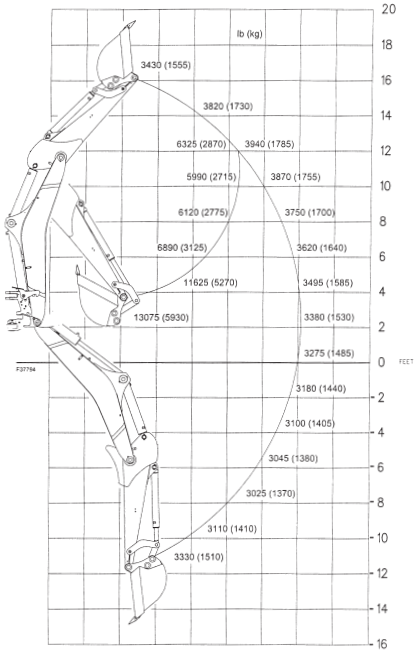

SAE 3,045 psi
P=210 Bar
Front Counterweight
Front Tires: 12-16.5 (contractor 4WD) TITAN
Rear Tires: 19.5L-24 (Ind. Tract. Lug R4) TITAN

BACKHOE BOOM AND SHORT TELESCOPIC DIPPER RETRACTED WITH HD BACKHOE BUCKET
610 mm (156 kg) / Loader Bucket 6 x 1

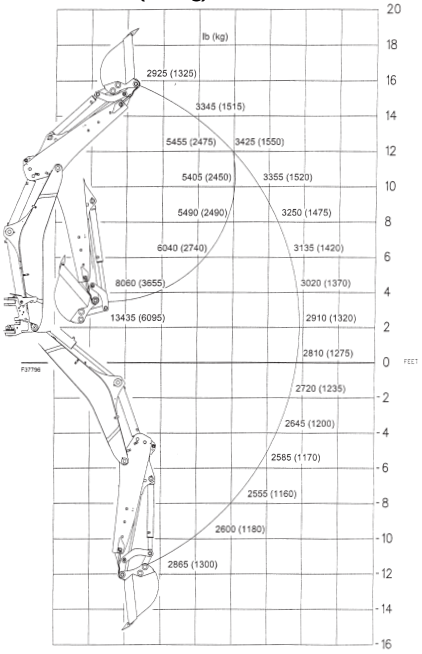

SAE 3,045 psi
P=210 Bar
Front Counterweight
Front Tires: 12-16.5 (contractor 4WD) TITAN
Rear Tires: 19.5L-24 (Ind. Tract. Lug R4) TITAN

BACKHOE BOOM AND SHORT TELESCOPIC DIPPER EXTENDED WITH HD BACKHOE BUCKET
610 mm (156 kg) / Loader Bucket 6 x 1

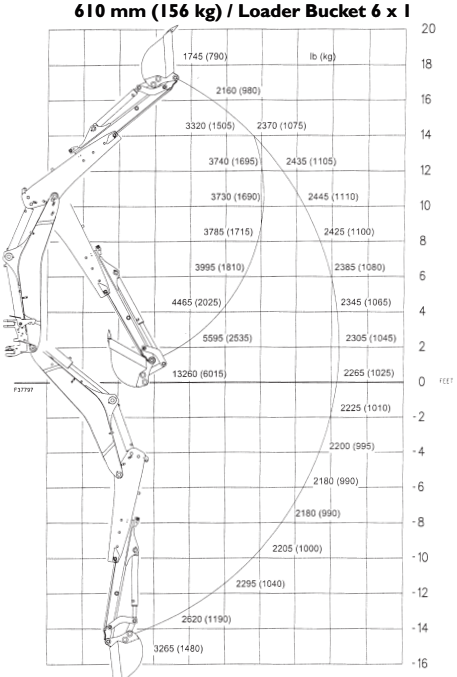

SAE 3,045 psi
P=210 Bar
Front Counterweight
Front Tires: 12-16.5 (contractor 4WD) TITAN
Rear Tires: 19.5L-24 (Ind. Tract. Lug R4) TITAN

B95C LR B110C LIFT CAPACITIES

LIFT CAPACITIES

BACKHOE BOOM AND LONG BACKHOE DIPPER WITH HD BACKHOE BUCKET
610 mm (156 kg) / Loader Bucket 6 x 1

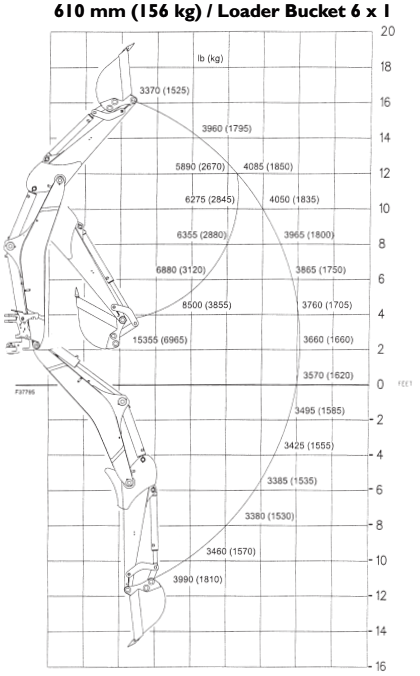

SAE 3,045 psi
P=210 Bar
Front Counterweight
Front Tires: 12-16.5 (contractor 4WD) TITAN
Rear Tires: 19.5L-24 (Ind. Tract. Lug R4) TITAN

BACKHOE BOOM AND LONG TELESCOPIC DIPPER RETRACTED WITH HD BACKHOE BUCKET
610 mm (156 kg) / Loader Bucket 6 x 1

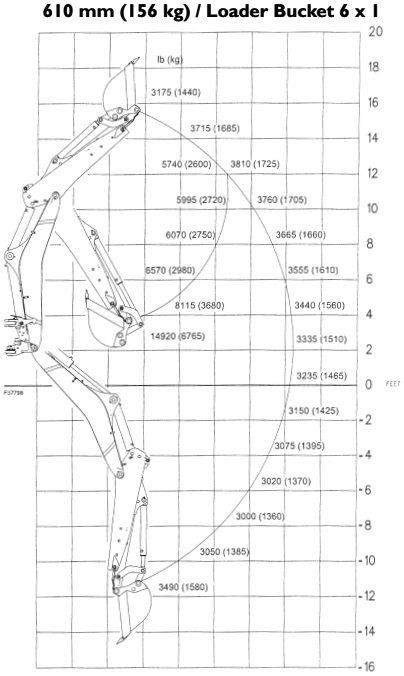

SAE 3,045 psi
P=210 Bar
Front Counterweight
Front Tires: 12-16.5 (contractor 4WD) TITAN
Rear Tires: 19.5L-24 (Ind. Tract. Lug R4) TITAN

BACKHOE BOOM AND LONG TELESCOPIC DIPPER EXTENDED WITH HD BACKHOE BUCKET
610 mm (156 kg) / Loader Bucket 6 x 1

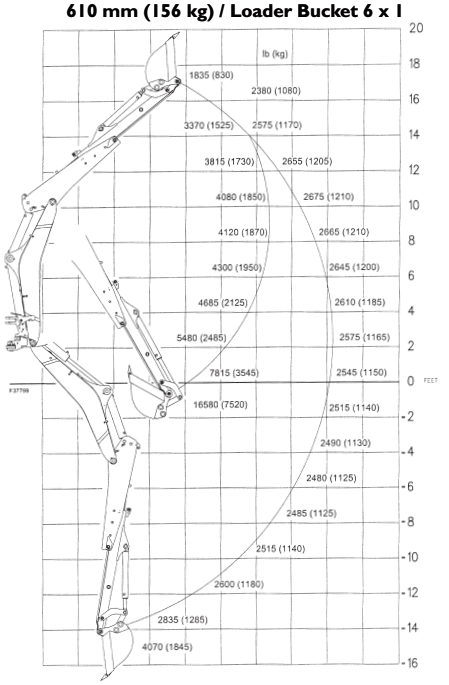

SAE 3,045 psi
P=210 Bar
Front Counterweight
Front Tires: 12-16.5 (contractor 4WD) TITAN
Rear Tires: 19.5L-24 (Ind. Tract. Lug R4) TITAN

B95C B95C TC B95C LR

BASE & OPTIONAL EQUIPMENT

BASE EQUIPMENT

ENGINE
Dry dual-element air cleaner
Fuel filter w/ water seperator
10 micron paper filter
Glow Plugs

TRANSMISSION
Power shuttle fully synchronized gearbox, 4 forward/4 reverse speeds, and power-reversing torque converter
Two position electric disconnect on loader control and gearshift

OUTBOARD REAR AXLE/BRAKES
Planetary final drives
Button activated differential lock
Multi-plate, hydraulic, self-adjusting, self-equalizing outboard wet disc brakes
Independent SAHR parking/emergency brake

FRONT AXLE
74" tread width
8-bolt wheel hubs
Hydrostatic power steering with priority valve
Integrated steering cylinder
2WD axle: cast iron
FWD axle: cast iron
FWD electrical engagement with indicator light

ELECTRICAL
12-volt system
120-amp high-capacity alternator
Single battery
Sealed fuseblock compartment
Water resistant main fuseblock

LIGHTING
4 Halogen worklights on canopy
8 Halogen worklights on cab
Stop and turn signals
Four-way safety flashers

BACKHOE
Includes: Curved boom, Center pivot swing post, Boom cylinder, and Dipper cylinder
Dipper cylinder and dipstick
2-lever backhoe controls (SAE Pattern)
Dirt pads
Front counterweight - 282 lbs.
Backhoe bucket not included

OPERATOR'S STATION (ROPS)
Dual side entry flat deck
Interior rearview mirror
Built-in beverage holder
Key start switch with electric shut-off
2-position horn control
Electric analog instrumentation
Tachometer/hourmeter
Fuel gauge
Fixed steering wheel
Auxiliary 12-volt output/cigarette lighter
Pre-wired for emergency beacon
Pre-wired for road headlights
Vinyl suspension seat
2-inch retractable seatbelt

OPERATOR'S STATION (CAB)
Dual side entry flat deck
Interior rearview mirror
Built-in beverage holder
Coat hook
Pre-wired for radio
Key start switch with electric shut-off
Headliner
2-position horn control
Molded floor mat
Electric instrumentation
Tachometer/hourmeter
Fuel gauge
Interior dome light
Fixed steering wheel
Auxiliary 12-volt output/cigarette lighter
Pre-wired for emergency beacon
Pre-wired for road headlights
Adjustable side window openings
One-piece rear window
Adjustable heater/blower fan
Adjustable front sun-screen shade
Cloth suspension seat
2-inch retractable seatbelt
Heater

LOADER
Straight loader arm design (B95C, B95C LR)
Curved loader arm design (B95C TC)
4-Bar bucket linkage
Bucket level indicator
Return-to-dig feature
Dual lift and bucket cylinders
Hydromechanical self-leveling (B95C, B95C LR)
Single lever control
Loader arm support
1.1 yd^3 heavy duty bucket (B95C, B95C LR)
1.3 yd^3 heavy duty bucket (B95C TC)
Bolt-on cutting edge
Mechanical self leveling (B95C TC)

HYDRAULICS
O-ring Face seal connectors
"PD" type diagnostic port connectors
Open center coaxial drive hydraulic pump
10 micron spin-on filter element
Mechanical, Gear Pump - 151 L/min (40 gpm)
Pilot, VDR Piston Pump - 6 to 156 L/min (1.6 to 41.2 gpm)

SAFETY AND SECURITY
4-Post ROPS/FOPS
Lockable Compartments for: Engine, Hydraulic System, Battery and Tool storage
Lockable fuel cap
Horn
Backup alarm

OPTIONAL EQUIPMENT

ENGINE
*110-volt engine block heater

ELECTRICAL
Dual batteries

BACKHOE
2-lever pilot controls with pattern changer
*Mechanical backhoe bucket quick coupler
4-lever backhoe controls
2-lever ISO excavator pattern backhoe controls
HED extendible dipperstick
Multiple bucket options from factory
Heavy-duty and extra heavy-duty backhoe buckets
Flip over stabilizer pads

OPERATOR'S STATION (ROPS)
Electric ON/OFF control of hydraulic hand tool function
Foot-activated switch control of backhoe hammer (Mechanical)
Hand-activated switch control of backhoe hammer (Pilot)

OPERATOR'S STATION (CAB)
Air conditioning system
Electric ON/OFF control of hydraulic hand tool function
Foot-activated switch control of backhoe hammer (Mechanical)
Hand-activated switch control of backhoe hammer (Pilot)
3-inch retractable seatbelt
Tilt steering wheel
Super deluxe Air Ride seat
Cloth suspension seat
Vinyl suspension seat

LOADER
Multiple buckets available
Mechanical Quick Coupler (B95C, B95C LR)
Aux hydraulics

HYDRAULICS
Backhoe hammer circuit
Mid-mount hand tool circuit
Extra function backhoe valve with control pedal (less HED)
*Glide Ride control system

TOTAL VEHICLE
Fire extinguisher
Special order paint colors
*External rearview mirrors
Front fenders
*Operator cooling fan
*4wd driveshaft guard kit

LOADER ATTACHMENTS
Sweeper brooms
4x1 bucket
Auger
Claw
Forks
Scrap grapple

BACKHOE ATTACHMENTS
Hydraulic breaker
Hydraulic auger
Hydraulic thumb
Additional buckets

TIRES
Please see your dealer to discuss the other tire options available.

*Dealer installed option

B110C
BASE & OPTIONAL EQUIPMENT

BASE EQUIPMENT

ENGINE
Dry dual-element air cleaner
Fuel filter w/ water separator
10 micron paper filter
Glow Plugs

TRANSMISSION
Power shuttle fully synchronized gearbox, 4 forward/4 reverse speeds, and power-reversing torque converter
Two position electric disconnect on loader control and gearshift

OUTBOARD REAR AXLE/BRAKES
Planetary final drives
Button activated differential lock
Electric differential lock on powershift
Multi-plate, hydraulic, self-adjusting, self-equalizing outboard wet disc brakes
Independent SAHR parking/emergency brake

FRONT AXLE
74" tread width
Hydrostatic power steering with priority valve
Integrated steering cylinder
2WD axle: cast iron
FWD axle: cast iron
FWD electrical engagement with indicator light

ELECTRICAL
12-volt system
120-amp high-capacity
Dual wet batteries
Sealed fuseblock compartment
Water resistant main fuseblock

LIGHTING
8 halogen worklights
Stop and turn signals
Four-way safety flashers

BACKHOE
Includes: Curved boom, Center pivot swing post, Boom cylinder and Dipper cylinder

OPERATOR'S STATION (ROPS)
Dual side entry flat deck
Interior rearview mirror
Built-in beverage holder
Key start switch with electric shut-off
2-position horn control
Electric analog instrumentation
Tachometer/hourmeter
Fuel gauge
Tilt steering wheel (w/ Powershift)
Auxiliary 12-volt output/cigarette lighter
Pre-wired for emergency beacon
Pre-wired for road headlights
Vinyl suspension seat
SE3-inch retractable seatbelt

OPERATOR'S STATION (CAB)
Dual side entry flat deck
Interior rearview mirror
Built-in beverage holder
Coat hook
Pre-wired for radio
Key start switch with electric shut-off
Headliner
2-position horn control
Molded floor mat
Electric instrumentation
Tachometer/hourmeter
Fuel gauge
Interior dome light
Tilt steering wheel (w/ Powershift)
Auxiliary 12-volt output/cigarette lighter
Pre-wired for emergency beacon
Pre-wired for road headlights
Adjustable side window openings
One-piece rear window
Adjustable heater/blower fan
Adjustable front sun-screen shade
Cloth suspension seat
2-inch retractable seatbelt

LOADER
Straight loader arm design
4-Bar bucket linkage
Bucket level indicator
Return-to-dig feature
Dual lift and bucket cylinders
Hydromechanical self-leveling
Single lever control
1.3 yd^3 heavy duty bucket

HYDRAULICS
O-ring Face seal connectors
"PD" type diagnostic port connectors
Open center coaxial drive hydraulic pump
10 micron spin-on filter element
Relief valve protection
Mechanical, Gear Pump - 151 L/min (40 gpm)
Pilot, VDR Piston Pump - 6 to 156 L/min (1.6 to 41.2 gpm)

SAFETY AND SECURITY
4-Post ROPS/FOPS
Lockable compartments for: Engine, Hydraulic System, Battery and Tool storage
Lockable fuel cap
Battery disconnect switch
2" Retractable seat belt
Horn
Backup alarm

OPTIONAL EQUIPMENT

ENGINE
Grid heater starting aid
*110-volt engine block heater
*Centrifugal dust bowl pre-cleaner (B110B)

TRANSMISSION
Powershift, 4 forward/2 reverse speeds, and power-reversing torque converter
Single lever F-N-R control with safety detent

ELECTRICAL
Single battery

BACKHOE
2-lever pilot controls with pattern changer
*Mechanical backhoe bucket quick coupler
4-lever backhoe controls
2-lever ISO excavator pattern backhoe controls
HED extendible dipperstick
Multiple bucket options from factory
Heavy-duty and extra heavy-duty backhoe buckets

OPERATOR'S STATION (ROPS)
Electric ON/OFF control of hydraulic hand tool function
Foot-activated switch control of backhoe hammer (Mechanical)
Hand-activated switch control of backhoe hammer (Pilot)

OPERATOR'S STATION (CAB)
Air conditioning system
Super deluxe Air Ride seat
Cloth suspension seat
Vinyl suspension seat
Speedometer
Tilt steering wheel

LOADER
Multiple buckets available
Aux hydraulics

HYDRAULICS
Backhoe hammer circuit
Mid-mount hand tool circuit
Extra function backhoe valve with control pedal (less HED)
*Glide Ride control system

TOTAL VEHICLE
Fire extinguisher
Special order paint colors
*External rearview mirrors
Front fenders
*Operator cooling fan
*4wd driveshaft guard kit

LOADER ATTACHMENTS
Sweeper brooms
4x1 bucket
Auger
Claw
Forks
Scrap grapple

BACKHOE ATTACHMENTS
Hydraulic breaker
Hydraulic auger
Hydraulic thumb
Additional buckets

TIRES
Please see your dealer to discuss the other tire options available.

*Dealer installed option

U80C SPECIFICATIONS

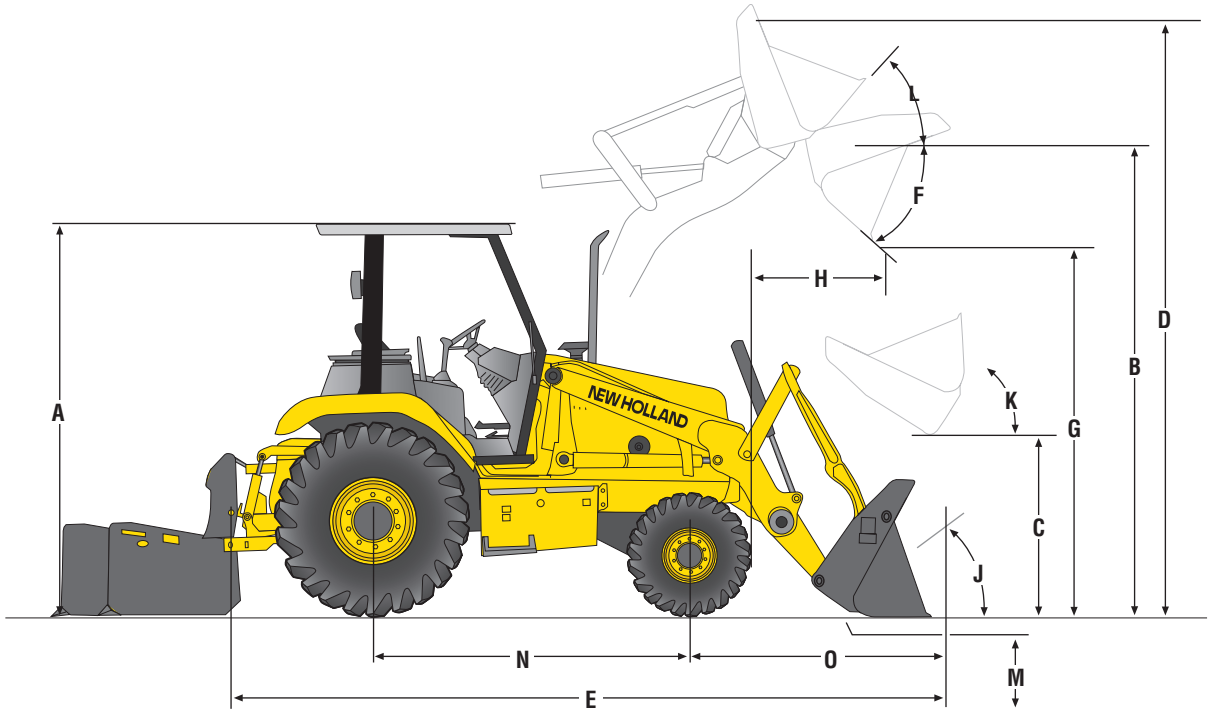

LOADER DIMENSIONS

		Long Lip Bucket	4 IN 1® Bucket
A.	Height to:	19.5 L x 24 Tires	17.5 L x 24 Tires
	Top of canopy, ft/in (m)	8' 12" (2.73)	8' 9" (2.67)
	Height to top of canopy – Low profile ROPS, ft/in (m)	8' 9" (2.65)	8' 6" (2.59)
	Top of cab, ft/in (m)	8' 12" (2.74)	8' 10" (2.68)
B.	Bucket hinge pin fully raised, ft/in (m)	11' 3" (3.41)	11' 3" (3.41)
C.	Bucket hinge pin @ SAE carry, ft/in (m)	1' 1" (0.33)	1' 3" (0.37)
D.	Overall operating height – fully raised, ft/in (m)	13' 9" (4.17)	14' 4" (4.35)
E.	Overall length w/ 3-point hitch, ft/in (m)	16' 11" (5.15)	16' 9" (5.09)
	Width over tires:		
	11 L x 16, ft/in (m)	6' 8" (2.02)	6' 8" (2.02)
	12 L x 16.5, ft/in (m)	6' 10" (2.06)	6' 10" (2.06)
	19.5 L x 24, ft/in (m)	6' 10" (2.07)	6' 10" (2.07)
	17.5 L x 24, ft/in (m)	6' 10" (2.07)	6' 10" (2.07)
F.	Dump angle @ full height	46°	45°
G.	Dump clearance @ full height, 45° dump:		
	Bucket, ft/in (m)	8' 8" (2.63)	8' 11" (2.71)
	Clam open, ft/in (m)	NA	9' 8" (2.93)

		Long Lip Bucket	4 IN 1® Bucket
H.	Dump reach @ full height, 45° dump:		
	Bucket, ft/in (m)	2' 2" (0.66)	2' 2" (0.66)
	Clam open, in (m)	NA	11.8 (0.29)
	Bucket rollback:		
J.	@ Groundline	40°	40°
K.	@ SAE carry	45°	45°
L.	@ Full height	Adjustable	Adjustable
M.	Digging depth below grade:		
	Bucket flat, in (m)	7.8 (0.19)	7.1 (0.18)
	Clam open (dozing), in (m)	NA	4.4 (0.11)
	Ground clearance at front axle, in (m)	10.9 (0.28)	10.9 (0.28)
N.	Wheelbase 4WD, ft/in (m)	7' 1" (2.15)	7' 1" (2.15)
	Wheelbase 2WD, ft/in (m)	7'0" (2.14)	7'0" (2.14)
O.	Reach from front axle centerline – bucket on ground, ft/in (m)	6' 3' (1.89)	5' 12" (1.83)
	Maximum clam opening, ft/in (m)	NA	3' 3" (0.97)
	Moldboard height, ft/in (m)	NA	3' 1" (0.93)
	Lift capacity to full height, lb (kg)	6,503 (2950)	6,537 (2965)
	Breakout force:		
	Lift cylinders, lb (N)	9,271 (41 239)	8,766 (38 993)
	Dump cylinders, lb (N)	9,607 (42 734)	10,325 (45 928)

NOTE: Loader dimensions taken with 4WD, 19.5 L x 24 rear tires and 82 in (2.08 m) general purpose bucket except as noted.

U80C SPECIFICATIONS

LOADER

Single-lever 5 function control w/ self-leveling and Return-to-Dig	In-line, reverse linkage
Positive hold float	Dual parallel dump cylinders
Return-to-dig	Clutch disconnect button on loader control and shift levers
Automatic self-leveling	Bucket position indicator

Loader Bucket Sizes	Width, in (m)	Weight, lbs (kg)	Struck, yd^3 (m^3)	Heaped, yd^3 (m^3)
Long Life Bucket	82 (2.08)	683 (310)	.87 (.67)	1.03 (0.79)
4-in-1 Bucket	82 (2.08)	1,462 (663)	.85 (.65)	1.04 (0.80)

ENGINE

Turbo	
Model	FPT F5HFL413D*A
Type	4-stroke, turbocharged
Cylinders	4
Bore x stroke, in (mm)	3.9 x 4.33 (99 x 110)
Displacement, in^3 (L)	207 (3.4)
Fuel injection	Direct HPCR (High Pressure Common Rail)
Engine speeds, (rpm)	
Rated speed, full load	2,200
Low idle	875 - 1,025
High idle, no load	2,300 - 2,450
Horsepower (SAE J1349)	
Gross @ 2,200 rpm, (kW)	85 (63)
Net @ 2,200 rpm, (kW)	78 (58)
Maximum torque @ 1,500 rpm	
Gross, lb-ft (Nm)	276 (374)
Net, lb-ft (Nm)	268 (364)
Torque rise at rated speed	36%

Note: Both naturally aspirated and turbocharged engines meet federal emission regulations.

POWERTRAIN

Transmission type	4 speed synchromesh with hydraulically actuated clutches and electric F/R shuttle control, clutch disconnect buttons on the transmission shifter and loader control lever			
Torque converter ratio	3.2:1			
Differential-lock	On the go push-button activation			
Service brakes	Individually applied hydraulically actuated, maintenance-free, self adjusting outboard mounted wet disc			
Parking brakes	Trans Mounted SAHR (Spring Applied Hydraulic Release)			
Travel speeds, mph (km/h)	1st	2nd	3rd	4th
Forward	3.8 (6.1)	6.1 (9.8)	13 (21)	24.3 (39.1)

Note: Travel speeds at 2,330 engine rpm with 19.5 L x 24 rear tires.

ELECTRICAL

Voltage	12 Volts, negative ground
Alternator, amps	120
Battery	685 CCA
Optional batteries	(2) 525 CCA
Power plugs, amps	30 total

HYDRAULICS

Pump	Gear-type, transmission mounted, direct drive to engine crankshaft
Loader flow @ rated engine rpm, gpm @ psi (L/min @ bar)	28.5 @ 3,000 (108 @ 207)
Loader control valve	2 or 3-spool with single lever control for lift, dump and tilt and auxiliary hydraulics, positive hold float and return-to-dig
3-pt hitch flow @ rated engine rpm, gpm @ psi (L/min @ bar)	3 to 8 @ 2,000 (0 to 30 @ 137)
3-pt hitch control valve	Sectional 4-spool, open-center parallel circuits with variable control for lift, pitch, tilt, and 2 auxiliary remotes
Loader auxiliary hydraulics, gpm (L/min)	12 to 28.5 (45.4 to 108)
Main relief pressure, psi @ gpm (bar @ L/min)	3,050 + 50 - 50 @ 28.5 (210 + 3 - 3 @ 108)
Filtration	7 micron full flow replaceable cartridge on return line, condition indicator light for filter
Oil cooler	Heavy-duty

TURNING DIAMETER

2WD, ft/in (m)	Brakes on Brakes off	12' 2" (3.70) 12' 10" (3.91)
4WD-engaged, ft/in (m)	Brakes on Brakes off	11' 7" (3.52) 13' 9" (4.18)
4WD-disengaged, ft/in (m)	Brakes on Brakes off	12' 3" (3.72) 12' 11" (3.92)

Note: Turning diameter dimensions are curb to curb w/82" (2.08 m) general purpose bucket.

TIRES

Front	2WD-11 L x 16.1, 10-ply rating 4WD-12 L x 16.5, 8-ply rating
Rear	2/4 WD-17.5 L x 24, 10-ply rating STD 2/4 WD-19.5 L x 24, 10-ply rating OPT

U80C SPECIFICATIONS

SERVICE CAPACITIES

Fuel tank, gal (L)	40 (151)
Hydraulic system, gal (L)	
Total	20.25 (77.0)
Reservoir w/filter	14.5 (55)
Reservoir w/o filter	14.0 (53.0)
Transmission, gal (L)	
2WD Total system	4.5 (19)
4WD Total system	5.25 (20)
4WD Front axle, qt (L)	
Differential	5.8 (5.5)
Planetaries (each)	0.75 (0.7)
Rear Axle, qt (L)	
Differential	14.4 (13.6)
Planetaries (each)	1.6 (1.5)
Engine oil w/filter, qt (L)	10.3 (9.7)
Cooling system, qt (L)	17 (16.1)

3 POINT HITCH

Category1 & II 3-point hitch	
Hydraulic lift, pitch, tilt and (2) auxiliary remote	
Variable flow from 0 to 8 gpm (0 to 30 L/min)	
485 lbs (220 kg) counterweight included with hitch	
3-point Hitch Lift Capacity	
Hitch position, in (mm)	lbs (N)
Lowest point	2,500 (11 121)
1/5	3,247 (14 444)
2/5	3,400 (15 125)
3/5	3,501 (15 574)
4/5	3,297 (14 666)
Highest point	2,984 (13 274)

Note: Hitch position is vertical distance of lowest hitch point above ground.

BASE & OPTIONAL EQUIPMENT

BASE EQUIPMENT

ENGINE
FPT FPT F5HFL413B*A
Turbocharged Aftercooled
Automatic fan belt tensioner
Integral engine oil cooling
In line fuel filter
Cooled EGR
Dual element air cleaner
120 amp alternator
685 CCA 12-volt battery
Heavy duty radiator
Diesel particulate filter muffler

POWERTRAIN
4WD – 2WD
4F/4R Power shuttle synchromesh transmission
Torque converter
Transmission de-clutch
Electro-hydraulic differential lock
Hydrostatic steering
Outboard wet disc brakes

HYDRAULICS
2 spool loader control valve
4 spool 3-point hitch control valve
Heavy-duty oil cooler
Flip forward hood
Lights:
- 2 halogen headlights
- 2 rear flood
- 2 rear tail and stop
- 2 front flashers/turn
- 2 rear flashers/turn

OPERATOR ENVIRONMENT
ROPS/FOPS canopy
Key start
Hydrostatic steering
Standard seat w/15° right, 30° right
Foot throttles*
Loader control lever w/push button activation of differential lock and transmission de-clutch
Two Accessory power plugs (30 amp)
Anti-vandalism covers
Beverage holder
Coat hook w/tether strap
Interior rear-view mirror
2" (51 mm) retractable seat belt
Storage box

INSTRUMENTS
Gauges — back lit
- Engine water temperature
- Converter oil temperature
- Fuel
- Tachometer/hourmeter
- Voltmeter

Warning lights
- Air cleaner restriction
- Alternator
- Engine oil pressure
- Hydraulic oil filter bypass
- Parking brake engagement
- Rear axle fluid temperature sensing system
- Low fuel

Audible alarms
- Coolant temperature
- Engine oil pressure
- Parking brake engagement
- Shuttle engagement
- Backup alarm
- Regeneration

Turn signal indicators
Horn

OPTIONAL EQUIPMENT

OPERATOR STATION
Cab w/ Heat
Cab w/ Heat and Air Conditioning
Vinyl Suspension Seat w/ Armrest (Std. on 4 wheel drive)
Hand Throttleå

ENGINE
Dual Batteries

HYDRAULICS
Laser-Ready Valve Kit (includes valve, plumbing, and electrical harness)
5 Spool, Dual Tilt Cylinders w/ Return to Position, Load Holding Valve, and 3 Point Hitch Control
3 Point Hitch w/ PTO Hydraulic Pump (required when installing or using an hydraulic PTO)
Glide Ride

LOADER
Loader Auxiliary Hydraulics and Controls (3 spool loader valve)
Pin-On Multipurpose (4X1)
82" Loader Bucket w/ Cutting Edge(includes auxiliary hydraulics)
Hydraulic Quick Coupler (From FFC, includes auxiliary hydraulics, 3 spool valve)

OTHER
Drawbar
Tool Box
84" Box Scraper
Rear Counterweight (3,000 lbs)
Additional Stackable Rear Counterweights (475 lbs)
19.5 x 24 10PR Rear Tires
Wheel weights - good
Wide Seat Belt, 3" (75 mm)

World Class Products Demand World Class Dealers

The purchase of a New Holland machine is just the beginning of our relationship together. Consider your experienced New Holland Construction equipment dealer as your local partner in productivity. Assistance in selecting the right model for your operation and developing an affordable leasing or financing plan through New Holland's financing division, CNH Capital, are just a few advantages your local dealer can provide.

Your New Holland dealer's full service capabilities bring you responsive support with genuine New Holland parts and all makes coverage. More importantly, we are there wherever and whenever you need us with our fully equipped service vehicles. From customized maintenance programs to professional operator and technical training, our factory-trained service and parts experts are there to assist you with any of your equipment support needs.

Your business deserves nothing less than world class product, supported by a world class business partner. That's your New Holland Construction Equipment dealer — your partner in productivity.

CUSTOMER SERVICE
1-888-365-6423

New Holland Construction Equipment is backed with a Limited Warranty for 1-Year/Unlimited Hours. See the Warranty and Limitation of Liability for warranty details and terms.

NEW HOLLAND
CONSTRUCTION

New Holland Construction
500 Diller Ave.
New Holland, PA 17557

www.newholland.com

Design, materials and/or specifications are subject to change without notice and without liability therefor. Specifications are applicable to units sold in Canada, the United States, its territories and possessions, and may vary outside these areas.

© 2014 CNH Industrial America LLC. All rights reserved. New Holland is a trademark in the United States and many other countries, owned by or licensed to CNH Industrial N.V., its subsidiaries or affiliates. Any trademarks referred to herein, in association with goods and/or services of companies other than CNH America LLC, are the property of those respective companies.

THINK SAFETY

Safety begins with a thorough understanding of the equipment. Always make sure you and your operators read the Operator's Manual before using the equipment. Pay close attention to all safety and operating decals and never operate machinery without all shields, protective devices and structures in place. This is a one-person machine. Never allow riders in the cab, outside the machine, or in/on any bucket or attachment.

NHC201410TLBSPECS • 101402 • SG • PRINTED IN U.S.A.

Printed on recycled paper