1 @ 10×4 REINFORCED CONCRETE BOX BRIDGE

Maximum Fill Height ft	Dimensions ST in.	SB in.	WT in.	BW ft	Bars TST Size	No.	Spacing in.	Length ft	Bars TSB Size	No.	Spacing in.	Length ft	Bars BST Size	No.	Spacing in.	Length ft	Bars BSB Size	No.	Spacing in.	Length ft	Bars EWE Size	No.	Spacing in.	Length ft	Bar EWI Size	No.	Spacing in.	Length ft	Bars LNT No.	Bars LND No.	Bars WS No.	Concrete CY/LF	Reinf Steel LB/LF
No Fill	9.5	9	8	11.33	4	1	12	10.83	7	2	6	10.83	8	1	12	11.83	4	1	12	11.83	4	2	12	4.00	4	2	12	4.00	49	20	4	0.87	201
3	10	9	8	11.33	4	1	12	10.83	7	2	6	10.83	9	1	12	11.83	4	1	12	11.83	4	2	12	4.00	4	2	12	4.00	49	20	4	0.88	209
5	9	10	8	11.33	4	1	12	10.83	6	2	6	10.83	6	2	6	11.83	4	2	12	11.83	4	2	12	4.00	4	2	12	4.00	60	0	4	0.89	187
10	9	10	8	11.33	4	1	12	10.83	7	2	6	10.83	7	2	6	11.83	4	1	12	11.83	4	2	12	4.00	4	2	12	4.00	60	0	4	0.89	211
20	11	13	8	11.33	4	1	12	10.83	11	1	12	10.83	11	1	12	11.83	4	1	12	11.83	4	2	12	4.00	4	2	12	4.00	60	0	4	1.07	239
30	17	18	8	11.33	4	1	12	10.83	7	2	6	10.83	7	2	6	11.83	4	1	12	11.83	4	2	12	4.00	4	2	12	4.00	60	0	4	1.47	211
40	21	22	8	11.33	4	1	12	10.83	7	2	6	10.83	7	2	6	11.83	4	1	12	11.83	4	2	12	4.00	4	2	12	4.00	60	0	4	1.76	211
50	24	25	8	11.33	4	1	12	10.83	10	1	12	10.83	10	1	12	11.83	4	1	12	11.83	4	2	12	4.00	4	2	12	4.00	60	0	4	1.98	216
60	26	28	8	11.33	4	1	12	10.83	11	1	12	10.83	11	1	12	11.83	4	1	12	11.83	4	2	12	4.00	4	2	12	4.00	60	0	4	2.17	239

1 @ 10×5 REINFORCED CONCRETE BOX BRIDGE

Maximum Fill Height ft	Dimensions ST in.	SB in.	WT in.	BW ft	Bars TST Size	No.	Spacing in.	Length ft	Bars TSB Size	No.	Spacing in.	Length ft	Bars BST Size	No.	Spacing in.	Length ft	Bars BSB Size	No.	Spacing in.	Length ft	Bars EWE Size	No.	Spacing in.	Length ft	Bar EWI Size	No.	Spacing in.	Length ft	Bars LNT No.	Bars LND No.	Bars WS No.	Concrete CY/LF	Reinf Steel LB/LF
No Fill	9.5	9	8	11.33	4	1	12	10.83	7	2	6	10.83	7	1	12	11.83	4	1	12	11.83	4	2	12	5.00	4	2	12	5.00	53	20	4	0.92	206
3	10	9	8	11.33	4	1	12	10.83	7	2	6	10.83	9	1	12	11.83	4	1	12	11.83	4	2	12	5.00	4	2	12	5.00	53	20	4	0.93	215
5	9	10	8	11.33	4	1	12	10.83	6	2	6	10.83	6	2	6	11.83	4	1	12	11.83	4	2	12	5.00	4	2	12	5.00	64	0	4	0.94	192
10	9	10	8	11.33	4	1	12	10.83	7	2	6	10.83	7	2	6	11.83	4	1	12	11.83	4	2	12	5.00	4	2	12	5.00	64	0	4	0.94	217
20	11	13	8	11.33	4	1	12	10.83	11	1	12	10.83	11	1	12	11.83	4	1	12	11.83	4	2	12	5.00	4	2	12	5.00	64	0	4	1.12	245
30	17	18	8	11.33	4	1	12	10.83	7	2	6	10.83	7	2	6	11.83	4	1	12	11.83	4	2	12	5.00	4	2	12	5.00	64	0	4	1.52	217
40	21	22	8	11.33	4	1	12	10.83	7	2	6	10.83	7	2	6	11.83	4	1	12	11.83	4	2	12	5.00	4	2	12	5.00	64	0	4	1.81	217
50	24	25	9	11.50	4	1	12	11.00	10	1	12	11.00	10	1	12	12.00	4	1	12	12.00	4	2	12	5.00	4	2	12	5.00	64	0	4	2.09	224
60	26	28	10	11.67	4	1	12	11.16	11	1	12	11.16	11	1	12	12.16	4	1	12	12.16	4	2	12	5.00	4	2	12	5.00	64	0	4	2.33	249

1 @ 10×6 REINFORCED CONCRETE BOX BRIDGE

Maximum Fill Height ft	Dimensions ST in.	SB in.	WT in.	BW ft	Bars TST Size	No.	Spacing in.	Length ft	Bars TSB Size	No.	Spacing in.	Length ft	Bars BST Size	No.	Spacing in.	Length ft	Bars BSB Size	No.	Spacing in.	Length ft	Bars EWE Size	No.	Spacing in.	Length ft	Bar EWI Size	No.	Spacing in.	Length ft	Bars LNT No.	Bars LND No.	Bars WS No.	Concrete CY/LF	Reinf Steel LB/LF
No Fill	9.5	9	8	11.33	4	1	12	10.83	7	2	6	10.83	8	1	12	11.83	4	1	12	11.83	4	2	12	6.00	4	2	12	6.00	57	20	4	0.98	211
3	10	9	8	11.33	4	1	12	10.83	7	2	6	10.83	9	1	12	11.83	4	1	12	11.83	4	2	12	6.00	4	2	12	6.00	57	20	4	0.98	220
5	9	10	8	11.33	4	1	12	10.83	6	2	6	10.83	6	2	6	11.83	4	1	12	11.83	4	2	12	6.00	4	2	12	6.00	68	0	4	0.99	197
10	9	10	8	11.33	4	1	12	10.83	7	2	6	10.83	7	2	6	11.83	4	1	12	11.83	4	2	12	6.00	4	2	12	6.00	68	0	4	0.99	222
20	11	13	8	11.33	4	1	12	10.83	11	1	12	10.83	11	1	12	11.83	4	1	12	11.83	4	2	12	6.00	5	2	12	6.00	68	0	4	1.17	254
30	17	18	8	11.33	4	1	12	10.83	7	2	6	10.83	7	2	6	11.83	4	1	12	11.83	4	2	12	6.00	5	2	12	6.00	68	0	4	1.57	226
40	21	22	10	11.67	4	1	12	11.16	7	2	6	11.16	7	2	6	12.16	4	1	12	12.16	4	2	12	6.00	4	2	12	6.00	68	0	4	1.98	225
50	24	25	11	11.83	4	1	12	11.33	10	1	12	11.33	11	1	12	12.33	4	1	12	12.33	4	2	12	6.00	4	2	12	6.00	68	0	4	2.27	244
60	26	28	11	11.83	4	1	12	11.33	11	1	12	11.30	11	1	12	12.33	4	1	12	12.33	4	2	12	6.00	4	2	12	6.00	68	0	4	2.46	255

Note: Maximum fill height shown in the table is measured from the bottom of the top slab. To obtain the total fill height from the flow line, add the height of the box.

Note: When top slab is the riding surface (No Fill), the concrete cover to the top mat of reinforcing shall be 2-1/2 inches.

The following bar information applies to all fill cases in the table above:

Bars LNT Size = 4 Spacing = 12 in.

Bars LND Size = 4 Spacing = 6 in.

Bars WS Size = 8 Length = 5.00 ft. Spacing = 12 in.

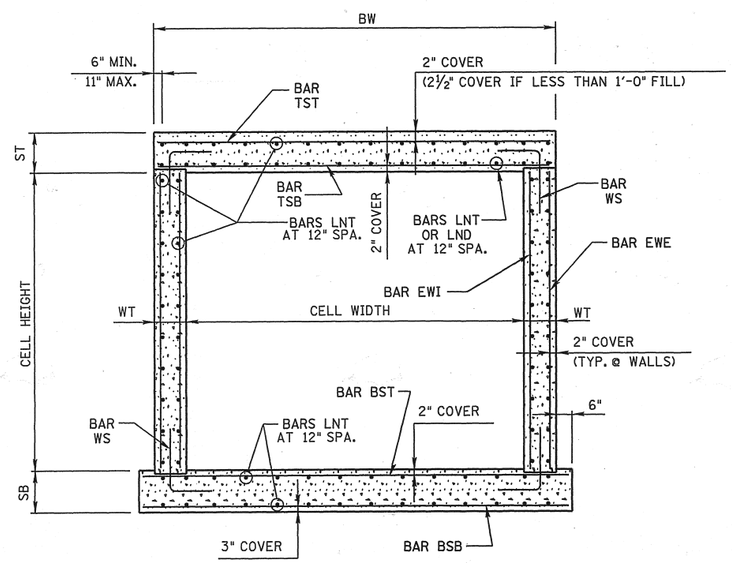

TYPICAL SECTION

CONST. NO.

PROJECT NO.	YEAR	SHEET NO.

REVISIONS

NO.	DATE	BY	BRIEF DESCRIPTION
1	12-7-01	CMH	REVISED TITLE BLOCK
2	9-19-06	HW	REVISED WT DIMENSION FOR 5'-0" FILL

NOTE: FOR DESCRIPTIONS OF BOX DIMENSIONS AND REINFORCING BAR DESIGNATIONS SEE STANDARD DRAWING NO. STD-15-4.

STATE OF TENNESSEE
DEPARTMENT OF TRANSPORTATION

STANDARD REINFORCED CONCRETE BOX BRIDGE
INTERIOR SECTION
SPANS: 1 BARREL AT 10'-0"
CLEAR HEIGHTS 4'-0" THRU 6'-0"
0' THRU 60' FILL
2000

CORRECT Edward P. Wasserman
ENGINEER OF STRUCTURES

DESIGNED BY LEFEVRE & HARPER DATE 1-00
DRAWN BY KEVIN MARTINKO DATE 3-00
SUPERVISED BY FIELDS & HOLLORAN DATE 3-00
CHECKED BY ROBERT LEFEVRE DATE 6-00

STD-15-38