STATE OF TENNESSEE
DEPARTMENT OF TRANSPORTATION
ROADWAY DESIGN DIVISION
SUITE 1300 JAMES K. POLK BUILDING
505 DEADERICK STREET
NASHVILLE, TENNESSEE 37243-3848
(615) 741-2221

JOHN C. SCHROER
COMMISSIONER

BILL HASLAM
GOVERNOR

INSTRUCTIONAL BULLETIN NO. 17-09

Regarding Revised Standard Drawings

Effective February 9th, 2018 letting (November 29th, 2017 Turn-in), the following Standard Drawings have been revised. Also, Section 5, Index of Standard Drawings, of the Roadway Design Guidelines has been revised to incorporate these changes.

Revised Standard Drawings:

DRAWING NUMBER	CURRENT REVISION DATE	DESCRIPTION
	09-26-16	STANDARD ROADWAY DRAWINGS TITLE SHEET
[3]D-PB-1	03-16-17	STANDARD DETAILS FOR CONCRETE PIPE INSTALLATION
[1]D-SEW-1A	03-16-17	SIDE DRAIN CONCRETE ENDWALL WITH STEEL PIPE GRATE FOR 15” THRU 48” PIPES – 6:1 SLOPE
[1]EC-STR-3B	03-16-17	SILT FENCE
[3]EC-STR-11	03-16-17	CULVERT PROTECTION TYPE 1
[3]EC-STR-61	03-16-17	LEVEL SPREADERS
[4]RD01-TS-2	03-16-17	DESIGN STANDARDS FOR COLLECTOR ROADS AND STREETS
[4]RD01-TS-8	03-16-17	SHARED USE PATH TYPICAL SECTIONS
[2]RD-L-3	03-16-17	STANDARD LEGEND FOR SIGNALIZATION AND LIGHTING

[2]RD-L-4	03-16-17	STANDARD LEGEND FOR SIGNALIZATION AND LIGHTING
[2]S-GRS-4	03-16-17	SPECIAL CASE GUARDRAIL HEIGHT TRANSITION DETAIL
[1]S-GRT-1	03-16-17	TYPE 12 GUARDRAIL TERMINAL BURIED-IN-BACKSLOPE
[4]T-PBR-1	03-16-17	INTERCONNECTED PORTABLE BARRIER RAIL

Revised Standard Drawings with New Titles:

DRAWING NUMBER	CURRENT REVISION DATE	DESCRIPTION
T-PBR-2	03-16-17	DETAILS FOR FLEXIBLE DELINEATORS

Copies of the revised and new standard drawings are attached.
A copy of the revised Roadway Design Guidelines Section 5 Index of Standard Drawings is attached.

Note 1: Minor revisions, revised notes, and/or revised references to other standard drawings
Note 2: Minor revisions, revised details
Note 3: Minor revisions, revised pay item numbers
Note 4: add/remove details and/or tables, revised notes

Jennifer Lloyd

Jennifer Lloyd, PE
Civil Engineering Director
Roadway Design Division

This IB voids IB 17-03, 17-05, and 17-07 due to incorporation into the revised Section 5, Index of Standard Drawings, of the Roadway Design Guidelines.

KJL:ARH:RBB:SSH
06/30/2017

REV. 05-26-93: CHANGED ENGINEERING DIRECTOR OF DESIGN DIVISION'S SIGNATURE.

REV. 01-19-97: REDREW ON CADD. REMOVED REFERENCE TO DIVISION OF STRUCTURE.

REV. 09-05-97: CHANGED ENGINEERING DIRECTOR OF DESIGN DIVISION'S SIGNATURE.

REV. 07-29-99: CHANGED ENGINEERING DIRECTOR OF DESIGN DIVISION'S SIGNATURE.

REV. 04-15-04: CHANGED TDOT LOGO.

REV. 08-01-08: CHANGED TDOT LOGO.

REV. 02-01-11: CHANGED ENGINEERING DIRECTOR OF DESIGN DIVISION'S SIGNATURE.

REV. 09-26-16: CHANGED ENGINEERING DIRECTOR OF DESIGN DIVISION'S SIGNATURE. REDREW SHEET.

BUREAU OF ENGINEERING
DESIGN DIVISION

STATE OF TENNESSEE
AGRICULTURE
COMMERCE
DEPARTMENT OF TRANSPORTATION

APPROVED Jennifer LLoyd
ENGINEERING DIRECTOR, DESIGN DIVISION

STANDARD ROADWAY DRAWINGS

26-SEP-2016 09:53

REV. 7-12-07: REVISED GENERAL NOTE (J)

REV. 6-1-09: REVISED GENERAL NOTE (I) AND TITLE NAME. ADDED GENERAL NOTE (J)

REV.2-1-12: REVISED DRAWING NAME ADDED EFF DETAIL. REVISED GENERAL NOTES AND TABLE. ADDED MINIMUM COVER TABLE.

REV. 8-21-12: REVISED GENERAL NOTES. CHANGED BACKFILL MATERIAL.

REV. 1-2-13: REVISED TRENCH DETAILS REVISED BEDDING TABLE.

REV. 3-16-17: CLARIFIED PAYMENT ITEM NO. IN TABLE B.

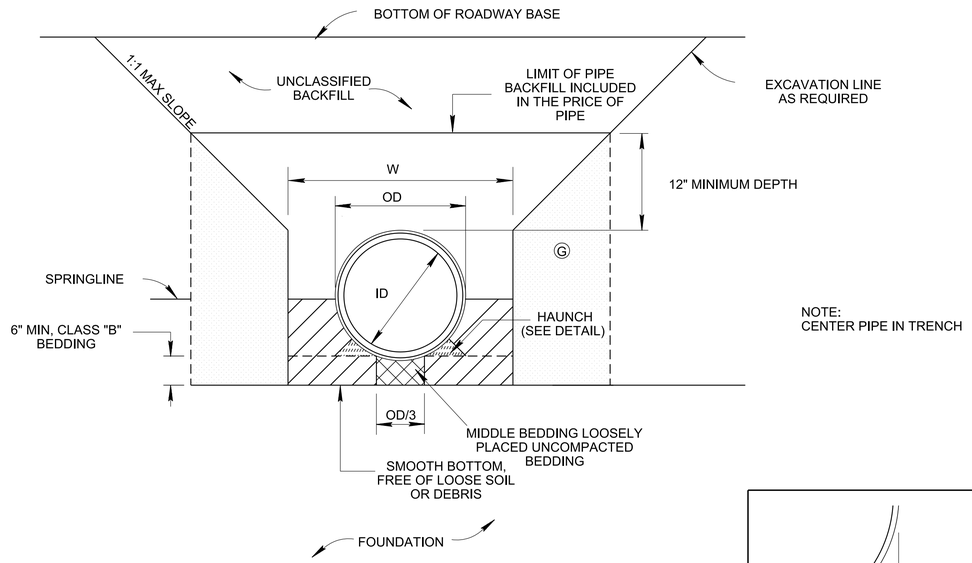

NOTE:
CENTER PIPE IN TRENCH

STANDARD TRENCH INSTALLATION (H)

(PIPE CULVERT INSTALLATION IN CUTS)

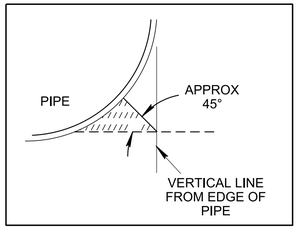

MINIMUM HAUNCH AREA DETAIL

TABLE A

REINFORCED CONCRETE PIPE CLASSIFICATION (AASHTO M170)	
FILL	CLASS
≤ 16	III
> 16 TO ≤ 24	IV
> 24 TO ≤ 38	V
> 38	SPECIAL DESIGN

TABLE B

PIPE CULVERT			CLASS "B" BEDDING MATERIAL CY/LF
PIPE DIA	PAYMENT ITEM NO	W	
18"	607-03.__	47"	0.149
24"	607-05.__	54"	0.192
30"	607-06.__	61"	0.239
36"	607-07.__	68"	0.289
42"	607-08.__	75"	0.343
48"	607-09.__	82"	0.400
54"	607-10.__	89"	0.461
60"	607-11.__	96"	0.525
66"	607-12.__	106"	0.623
72"	607-13.__	115"	0.719
78"	607-14.__	124"	0.821
84"	607-15.__	133"	0.929

OD=OUTSIDE DIAMETER
ID=INSIDE DIAMETER

CLASS "B" BEDDING COMPACTED TO 90% STANDARD PROCTOR DENSITY

CLASS "B" BEDDING UNCOMPACTED

FIRM INSITU SOIL OR CLASS "B" BEDDING COMPACTED TO 90% STANDARD PROCTOR DENSITY

HAUNCH AREA, SHOVEL COMPACTED

GENERAL NOTES

(A) REINFORCED CONCRETE PIPE SHALL MEET THE REQUIREMENTS OF AASHTO M-170 THE WALL THICKNESS SHALL BE "WALL B" (EXCEPT: FOR STRUCTURES DEEPER THAN THE MINIMUM DEPTH, "WALL C" MAY BE USED) AND THE CLASS SHALL BE AS LISTED IN "TABLE A". ALL PIPES SHALL BE CERTIFIED BY EITHER ACPA OR NCPA.

(B) WHERE THE TRENCH FOUNDATION IS FOUND UNACCEPTABLE OR LOCATION WHERE THE WATER TABLE IS FOUND HIGH:

(1) IMPROVED FOUNDATION OR EXCAVATABLE FLOWABLE FILL (EFF) MAY BE USED AT ENGINEER'S INSTRUCTION AS SHOWN ON D-PB-2.

(2) MAX FILL HEIGHTS AND JOINT SPECIFICATIONS SHALL BE REVIEWED TO VERIFY CONDITIONS MEET WITH THE MANUFACTURER'S SPECIFICATIONS.

(C) FOR MINIMUM CONSTRUCTION COVER DEPTHS SEE D-PB-3.

(D) IF LOCAL SOIL CONDITIONS MEET MINIMUM BEDDING REQUIREMENTS BEDDING IS NOT REQUIRED UNDER SIDE DRAINS FOR PRIVATE DRIVES, FIELD ENTRANCES, PIPES PARALLEL TO THE ROADWAY IN AN UNPAVED MEDIAN, PIPES OUTSIDE THE SHOULDER LIMITS OF INTERCHANGE RAMPS, OR PIPES OUTSIDE NORMAL SLOPE LINES.

(E) FOR ADDITIONAL INSTALLATION INFO SEE SECTION 27 "CONCRETE CULVERTS" OF THE AASHTO STANDARD SPECIFICATIONS FOR HIGHWAYS AND BRIDGES AND ASTM C-1479-10 AND TO MANUFACTURER'S SPECIFICATIONS.

(F) ONLY AS MUCH TRENCH AS CAN BE SAFELY MAINTAINED SHALL BE OPENED. ALL TRENCHES SHALL BE BACK FILLED TO THE MINIMUM COVER DEPTH "D" ABOVE THE PIPE AND COMPACTED AS SOON AS PRACTICABLE, BUT NOT LATER THAN THE END OF EACH WORKING DAY.

(G) FOR TRENCHES WITH IN SITU SOIL WALLS, THE SOIL SHALL BE RELATIVELY AS DENSE AS THE MAJORITY OF THE SUBGRADE AS DETERMINED BY THE ENGINEER. SOIL NOT MEETING THIS REQUIREMENT SHALL BE REMOVED AND REPLACED.

(H) FOR EMBANKMENT AREAS OR WHERE TRENCH CONDITIONS DO NOT EXIST, AN INDUCED TRENCH SOIL EMBANKMENT SHALL BE CONSTRUCTED SEE D-PB-3.

(I) ARCH AND ELLIPTICAL SHAPED PIPE CULVERTS SHALL BE INSTALLED THE SAME AS CIRCULAR WITH O.D. EQUAL TO THE WIDEST HORIZONTAL DIMENSION ON THE PIPE. TO ESTIMATE BEDDING MATERIAL FOR THESE PIPES WITH INTERNAL WIDTH THE SAME AS DIAMETER IN THE TABLE, MULTIPLY BEDDING QUANTITY BY 0.5 FOR THE SHOWN MIN TRENCH DIMENSIONS.

(J) FOR MULTIPLE PIPES MINIMUM SPACING BETWEEN PIPES IS:

36" PIPES AND SMALLER: EQUAL TO THE OUTSIDE DIAMETER OF THE LARGEST PIPE.
PIPES LARGER THAN 36": EQUAL TO HALF THE OUTSIDE DIAMETER OF THE LARGEST PIPE.

(K) THE BACKFILL SHALL BE TYPE "B" BEDDING MATERIAL MEETING THE REQUIREMENTS OF CONSTRUCTION SPECIFICATION SUBSECTION 903.05 TO THE SPRINGLINE.

UNCLASSIFIED BACKFILL SHALL BE PLACED AND COMPACTED IN LAYERS NOT EXCEEDING AN 8 INCH LOOSE LIFT THICKNESS AND BROUGHT UP EVENLY AND SIMULTANEOUSLY ON BOTH SIDES OF THE PIPE TO AN ELEVATION NOT LESS THAN ONE FOOT ABOVE THE TOP OF THE PIPE.

UNCLASSIFIED BACKFILL TO THE LIMIT OF PIPE BACKFILL LINE SHALL BE COMPACTED IN ACCORDANCE TO STANDARD SPECIFICATION 204.11.

A MINIMUM COMPACTION LEVEL OF 90% STANDARD PROCTOR DENSITY PER AASHTO T99 SHALL BE ACHIEVED BY USE OF VIBRATORY PLATE. HYDROHAMMER TYPE COMPACTORS SHALL NOT BE USED OVER THE PIPE. ALL COMPACTION EQUIPMENT USED SHALL BE APPROVED BY THE ENGINEER.

(L) JOINTS BETWEEN PIPES REQUIRE A RUBBER GASKET MEETING ASTM C443. AT CONNECTIONS TO STRUCTURES USE NON-SHRINK GROUT OR RUBBER GASKET PER C923 OR C1478.

(M) INSPECTION REQUIREMENTS

(1) ALL PIPES SHALL UNDERGO INSPECTION DURING INSTALLATION, FOR LONGITUDINAL AND TRANSVERSE CRACKS. (PER SECTION 27 OF AASHTO STANDARD SPECIFICATIONS FOR HIGHWAYS AND BRIDGES)

(2) FINAL INSPECTIONS SHALL BE CONDUCTED NO SOONER THAN 30 DAYS AFTER COMPLETION OF INSTALLATION AND FINAL FILL.

(N) EXCAVATION FOR PIPE WILL NOT BE MEASURED AND PAID FOR DIRECTLY, BUT THE COST WILL BE INCLUDED IN THE COST OF THE PROPOSED PIPE CULVERT.

PAYMENT FOR GRANULAR COMPACTABLE TYPE "B" BACKFILL, UNCLASSIFIED BACKFILL TO THE LIMIT LINE, AND/OR EXCAVATABLE FLOWABLE FILL INCLUDING BEDDING MATERIAL WILL BE INCLUDED IN THE UNIT PRICE OF THE PIPE.

MINOR REVISION -- FHWA APPROVAL NOT REQUIRED.

STATE OF TENNESSEE
DEPARTMENT OF TRANSPORTATION

STANDARD DETAILS FOR CONCRETE PIPE INSTALLATION

D-PB-1

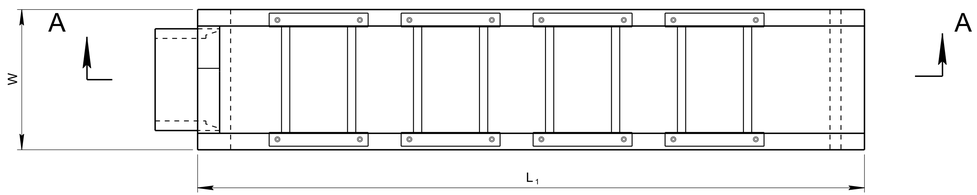

PLAN

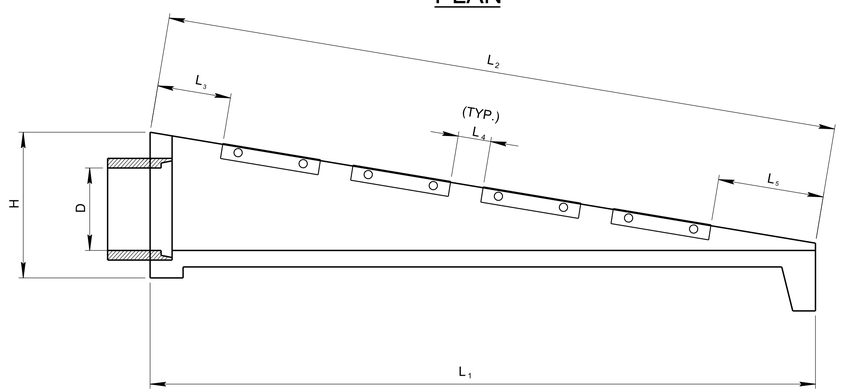

SECTION A-A

GENERAL NOTES

(A) DRAWING TO BE USED FOR ALL 15" THRU 48" SIDE DRAIN CONCRETE ENDWALLS. FOR ENDWALL CONSTRUCTION DIMENSIONS AND QUANTITIES, EXCEPT STEEL PIPE GRATES, SEE THE FOLLOWING STANDARD DRAWINGS:

15" ENDWALL - SEE D-PE-15A & D-PE-15B WITH 6:1 WINGWALL SLOPE
18" ENDWALL - SEE D-PE-18A & D-PE-18B WITH 6:1 WINGWALL SLOPE

24" ENDWALL - SEE D-PE-24A & D-PE-24B WITH 6:1 WINGWALL SLOPE
30" ENDWALL - SEE D-PE-30A & D-PE-30B WITH 6:1 WINGWALL SLOPE
36" ENDWALL - SEE D-PE-36A & D-PE-36B WITH 6:1 WINGWALL SLOPE
42" ENDWALL - SEE D-PE-42A & D-PE-42B WITH 6:1 WINGWALL SLOPE
48" ENDWALL - SEE D-PE-48A & D-PE-48B WITH 6:1 WINGWALL SLOPE

(B) NOTE: 30" THRU 48" SIDE DRAIN CONCRETE ENDWALL REQUIRES STEEL PIPE GRATES SHOWN ON THIS DRAWING. THE CONTRACTOR SHALL OMIT THE CONCRETE BLOCKOUTS AS SHOWN ON THE ABOVE DRAWINGS AND SUBSTITUTE THE FOLLOWING REINFORCING BARS:

30" ENDWALL - SUBSTITUTE A465 & A466 BY EXTENDING A464 TO 19'-5"
36" ENDWALL - SUBSTITUTE A464 & A465 BY EXTENDING A463 TO 23'-0"
42" ENDWALL - SUBSTITUTE A465 (2 BARS), A466 & A467 BY EXTENDING A464 TO 26'-0"
48" ENDWALL - SUBSTITUTE A465 (2 BARS), A466 & A467 BY EXTENDING A464 TO 29'-7"

THE MATERIALS, WELDING AND PAINTING FOR STRUCTURAL STEEL GRATE SHALL CONFORM TO THE FOLLOWING SPECIFICATIONS:

(1) ANGLES: ASTM A36

(2) STEEL PIPE: ASTM A53, TYPE E, GRADE B, STANDARD WEIGHT (SW) FOR 15" THRU 24" DIAMETER PIPE CULVERT (STEEL GRATE IS OPTIONAL FOR 15" THRU 24" DIAMETER PIPE CULVERT). ASTM A53, TYPE E, GRADE B, DOUBLE EXTRA STRONG WEIGHT (XXS) - FOR 30" THRU 48" DIAMETER PIPE CULVERT.

(3) WELDING: AASHTO/AWS D1.5M/D1.5 BRIDGE WELDING CODE (LATEST EDITION)

(4) THE GRATE SHALL BE PAINTED BLACK, FEDERAL SPECIFICATION TT-E-489J, AFTER FABRICATION.

(C) THE MATERIAL AND GALVANIZING FOR BOLTS, NUTS AND WASHERS SHALL CONFORM TO THE FOLLOWING SPECIFICATIONS:

(1) BOLTS, NUTS AND WASHERS: ASTM F1554 GRADE 36

(2) GALVANIZING: ASTM A153

(D) THE COST OF FURNISHING BOLTS, NUTS AND WASHERS, INCLUDING ALL MATERIALS, LABOR AND INCIDENTALS NECESSARY TO COMPLETE THE INSTALLATION, SHALL BE INCLUDED IN THE PRICE BID FOR STRUCTURAL STEEL.

(E) PAYMENT WILL BE MADE UNDER:

ITEM NUMBER 611-07.30	15IN ENDWALL (SIDE DRAIN)	EACH
ITEM NUMBER 611-07.31	18IN ENDWALL (SIDE DRAIN)	EACH
ITEM NUMBER 611-07.32	24IN ENDWALL (SIDE DRAIN)	EACH
ITEM NUMBER 611-07.33	30IN ENDWALL (SIDE DRAIN)	EACH
ITEM NUMBER 611-07.34	36IN ENDWALL (SIDE DRAIN)	EACH
ITEM NUMBER 611-07.35	42IN ENDWALL (SIDE DRAIN)	EACH
ITEM NUMBER 611-07.36	48IN ENDWALL (SIDE DRAIN)	EACH

(F) THE CONTRACTOR MAY ELECT TO SUBSTITUTE AN APPROVED ALTERNATIVE DESIGN

(G) DIMENSIONAL AND REINFORCING TOLERANCES WILL BE AS SHOWN IN STANDARD OPERATING PROCEDURE (SOP) 5-3.

- REV. 7-10-12: REVISED ALTERNATE ANCHORS FOR STRUCTURAL STEEL GRATES NOTE.
- REV. 1-10-13: CHANGED REQUIREMENT FOR GRATE ON ALL ENDWALLS.
- REV. 6-14-13: REVISED NOTE E, ADDED NOTES (F) AND (G).
- REV. 3-16-17: REVISED GENERAL NOTES. ADDED FOOTNOTE TO TABLE.

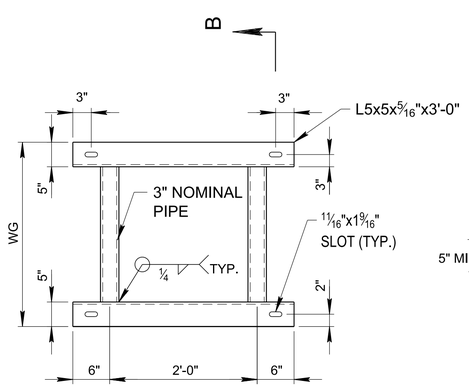

PLAN

STEEL PIPE GRATE

NOTE:
BOLTS SHALL NOT EXTEND MORE THAN ½" ABOVE TOP OF NUTS.

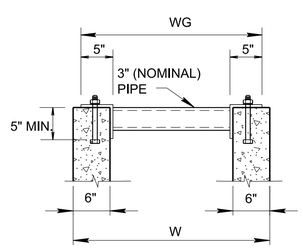

SECTION B-B

SHOWING ANCHOR BOLTS AND PARTIAL WINGWALLS

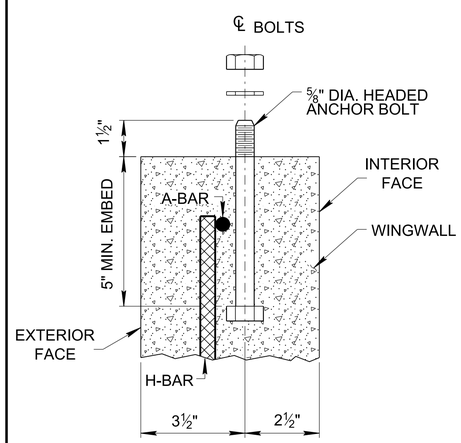

ANCHOR BOLT ASSEMBLY

ALTERNATE ANCHORS FOR STRUCTURAL STEEL GRATES

CERTIFICATION:
DRILLED-IN EPOXY ANCHORS OR CAST-IN THREADED INSERTS MAY BE UTILIZED IN LIEU OF CAST-IN HEADED ANCHOR BOLTS PROVIDED THAT THE CONTRACTOR FURNISHES CERTIFIED ANCHOR PULL OUT DATA FROM AN INDEPENDENT TESTING LABORATORY USING CLASS "A" CONCRETE AS PRESCRIBED BY TENNESSEE HIGHWAY SPECIFICATIONS. THE REQUIRED ULTIMATE LOAD FOR 5/8" DIAMETER ANCHORS IS 10,000 POUNDS.

DIMENSIONS AND QUANTITIES FOR ONE ENDWALL

SIDE DRAIN DIA. (D)	CONCRETE ENDWALL DIMENSIONS				GRATE PLACEMENT DIMENSIONS			STRUCTURAL STEEL GRATE DIMENSIONS AND QUANTITY		STRUCT. STEEL
	H	W	L_1	L_2	L_3	L_4	L_5	WG	NO. REQ'D.	LB.
✳ 15"	SEE STD. DWG. D-PE-15A				1'-9⅞"	1'-0"	2'-6"	2'-5"	2	172
✳ 18"	SEE STD. DWG. D-PE-18A				1'-2⅛"	0'-9"	1'-2"	2'-8"	3	269
✳ 24"	SEE STD. DWG. D-PE-24A				2'-2"	1'-0"	3'-2⅝"	3'-3"	3	296
30"	SEE STD. DWG. D-PE-30A				2'-2"	1'-0"	3'-3⅜"	3'-10"	4	694
36"	SEE STD. DWG. D-PE-36A				2'-2"	1'-0"	2'-9⅞"	4'-5"	5	975
42"	SEE STD. DWG. D-PE-42A				2'-2"	1'-0"	1'-10⅜"	5'-0"	6	1,294
48"	SEE STD. DWG. D-PE-48A				2'-2"	1'-0"	1'-5"	5'-7"	7	1,669

✳ STEEL GRATE IS OPTIONAL. IF STEEL GRATE IS USED, REFER TO THE DIMENSIONS AND QUANTITIES ON THIS TABLE.

☐ MINOR REVISION -- FHWA APPROVAL NOT REQUIRED.

STATE OF TENNESSEE
DEPARTMENT OF TRANSPORTATION

SIDE DRAIN CONCRETE ENDWALL WITH STEEL PIPE GRATE
FOR 15" THRU 48" PIPES - 6:1 SLOPE

NOT TO SCALE | 3-01-12 | D-SEW-1A

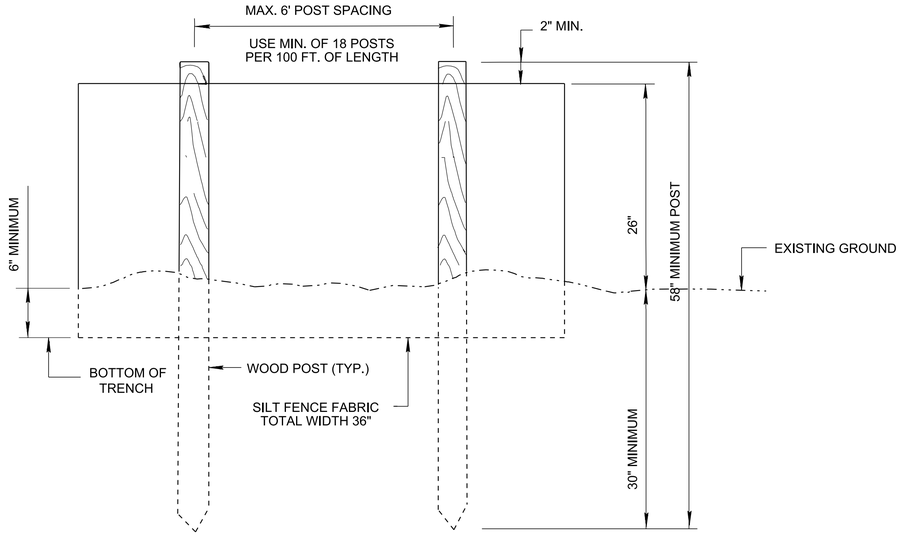

ELEVATION VIEW

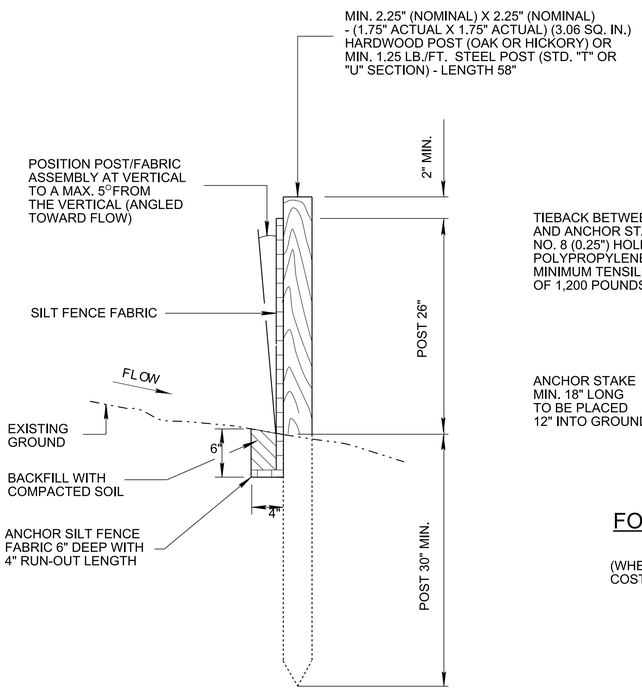

SECTIONAL VIEW

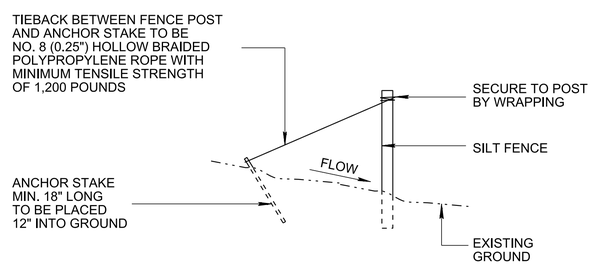

SILT FENCE TIEBACK

FOR STEEL POSTS OR WOOD POSTS

(WHEN REQUIRED BY THE ENGINEER OR NOTED IN THE PLANS.
COST TO BE INCLUDED IN THE ITEMS FOR SILT FENCE)

EROSION CONTROL PLAN LEGEND: * SF * SF * SF * SILT FENCE

SILT FENCE FABRIC SPECIFICATIONS

FABRIC PROPERTY AND TEST METHODS	REQUIRED PHYSICAL PROPERTIES (MARV VALUES OF TEST DATA)
GEOTEXTILE FABRIC TYPE	WOVEN SLIT FILM
APPARENT OPENING SIZE (ASTM D4751)	#30 TO #70 STANDARD SIEVE
WATER FLUX (ASTM D4491)	≥ 4 GPM/FT^2
TENSILE STRENGTH (ASTM D4632)	≥120 LB. (WARP DIRECTION) X 100 LB. (FILL DIRECTION)
ULTRAVIOLET STABILITY (AFTER 500 HRS PER ASTM D4355)	≥70%
ELONGATION (ASTM D4632)	≤ 20% (MAX)
BURST STRENGTH (ASTM D3786)	≥250 PSI
PUNCTURE STRENGTH (ASTM D4833)	≥60 LB.
TRAPEZOIDAL TEAR (ASTM D4533)	≥50 LB. (WARP DIRECTION) X 40 LB. (FILL DIRECTION)

- REV. 12-18-03: MODIFIED TABLE (1) AND GENERAL NOTE (E)
- REV. 7-29-04: CHANGED VALUES IN TABLE (1) FROM MEAN TO MARV VALUES.
- REV. 4-15-06: REMOVED POA SPECS. FROM TABLE 1. ADDED NOTE (L) REVISED TABLE TITLE. REORDERED GENERAL NOTES. REFORMATTED SHEET, REVISED NOTES, MISC. EDITS TO DRAWING.
- REV. 4-1-08: REMOVED TEMPORARY REFERENCE, REVISED NOTES, AND MISC. EDITS TO DRAWING.
- REV. 8-1-12: MINOR EDITS TO GENERAL NOTES.
- REV. 3-16-17: CHANGED SECOND NOTE (M) TO NOTE (N).

SILT FENCE GENERAL NOTES

(A) SILT FENCE IS USED TO INTERCEPT SMALL AMOUNTS OF SEDIMENT AND REDUCE VELOCITY FROM SHEET FLOW ONLY. DO NOT USE IT ADJACENT TO NATURAL WATER RESOURCES (WETLANDS OR STREAMS) OR ACROSS CONCENTRATED FLOW PATHS.

(B) THE MAXIMUM DRAINAGE AREA SIZE FOR A CONTINUOUS BARRIER SHALL BE 1/4 ACRE PER 100 LINEAR FEET OF FENCE LENGTH UP TO A MAXIMUM DRAINAGE AREA OF 2 ACRES. MAXIMUM SLOPE LENGTH BEHIND FENCE ON UPSLOPE SIDE SHALL BE 110 FEET (AS MEASURED ALONG THE GROUND SURFACE).

(C) WHEN INSTALLED AT THE TOE OF A SLOPE, SILT FENCE SHOULD BE PLACED 5 FEET TO 7 FEET AWAY FROM THE TOE TO ALLOW SPACE FOR PONDING OF WATER, COLLECTION OF SEDIMENT, AND EASE OF MAINTENANCE AND REMOVAL.

(D) WHEN TWO SECTIONS OF SILT FENCE FABRIC ADJOIN EACH OTHER THEY SHALL BE JOINED ACCORDING TO THE DETAILS ON STANDARD DRAWING EC-STR-3E.

(E) MAINTENANCE SHALL BE PERFORMED AS NEEDED; CAPTURED SOIL MATERIAL SHALL BE REMOVED WHEN "BULGES" DEVELOP IN THE SILT FENCE AND/OR OTHER EVIDENCE OF FILTER CLOGGING IS OBSERVED.

(F) STEEL POSTS SHALL BE ROLLED FROM HIGH CARBON STEEL AND SHALL HAVE A MINIMUM WEIGHT OF 1.25 LB/FT. POSTS SHALL BE HOT-DIPPED GALVANIZED OR PAINTED WITH HIGH GRADE WEATHER RESISTANT STEEL PAINT. STEEL POSTS SHALL BE EQUIPPED WITH AN ANCHOR PLATE HAVING A MINIMUM AREA OF 14 SQUARE INCHES. POSTS SHALL BE STUDDED, EMBOSSED, OR PUNCHED TO AID IN THE ATTACHMENT OF THE WIRE BACKING. POSTS AND ANCHOR PLATES SHALL CONFORM TO THE REQUIREMENTS OF ASTM A702.

(G) WHEN STEEL POSTS ARE USED THEY SHALL HAVE A PROJECTION FOR FASTENING WIRE TO THEM. THE WIRE FASTENERS SHOULD BE EVENLY SPACED WITH AT LEAST FIVE PER POST.

(H) IF THE FILTER MATERIAL IS STAPLED TO THE WOODEN STAKES, HEAVY DUTY WIRE STAPLES WITH ONE-HALF INCH LENGTH AND 1 INCH WIDTH SHALL BE USED AND EVENLY SPACED WITH AT LEAST FOUR PER POST. SILT FENCE FABRIC SHALL NOT BE STAPLED TO TREES.

(I) SILT FENCES SHOULD BE PLACED ALONG OR NEAR THE GROUND CONTOUR. THE BOTTOM OF FENCE AT GROUNDLINE SHOULD BE ON A ZERO PERCENT (0%) GRADE, PLUS OR MINUS FIVE TENTHS OF ONE PERCENT (\0.5%). THE ENDS OF A ROW OF SILT FENCE SHOULD BE TURNED UPSLOPE FORMING A J-HOOK TO FILTER ANY CONCENTRATED FLOW BEHIND FENCE.

(J) A PREASSEMBLED SILT FENCE MEETING THE REQUIREMENTS OF THIS DRAWING IS ACCEPTABLE IN LIEU OF A FIELD CONSTRUCTED SILT FENCE.

(K) STATIC SLICING IS THE PREFERRED METHOD OF FENCE INSTALLATION. STATIC SLICING INVOLVES THE INSERTION OF A NARROW CUTTING BLADE, PLACED AT THE SPECIFIED ANCHOR DEPTH FOR THE GIVEN FABRIC AS SHOWN ON THE APPLICABLE DETAIL, AND SIMULTANEOUSLY PULLING THE FENCE FABRIC INTO THE TRENCH AS THE TRENCH IS BEING EXCAVATED. ALTERNATE TRENCH-BASED METHODS ARE ALSO ACCEPTABLE. FOR TRENCH-BASED INSTALLATIONS, SILT FENCING SHALL BE INSTALLED PER THE FOLLOWING STEPS AND IN THE FOLLOWING ORDER:

- EXCAVATE TRENCH A MAXIMUM OF 4 INCHES WIDE AND 6 INCHES DEEP. THE TRENCH SHALL BE HAND-CLEANED FOLLOWING EXCAVATION TO REMOVE BULKY DEBRIS SUCH AS ROCKS, STICKS, AND SOIL CLODS FROM THE TRENCH.
- INSTALL FABRIC IN TRENCH.
- BACKFILL TRENCH (OVER-FILL) WITH SOIL PLACED AROUND FABRIC.
- COMPACT SOIL BACKFILL WITH MECHANICAL EQUIPMENT. DO NOT DAMAGE THE FABRIC DURING COMPACTION (DAMAGED FABRIC SHALL BE REPLACED).
- DRIVE AND SET SUPPORT POSTS PER SPACING REQUIREMENTS GIVEN ON THE APPLICABLE FENCE DETAIL. FOR PRE-ASSEMBLED SILT FENCE, DRIVE SUPPORT IN TO GROUND FIRST, FOLLOWED BY FABRIC PLACEMENT IN TRENCH.
- ATTACH FABRIC TO THE POSTS USING WIRE TIES OR STAPLES. SPACING AND DENSITY OF TIES OR STAPLES SHALL BE INSTALLED AS DESCRIBED IN NOTES G AND H.

(L) ONLY SILT FENCE FABRIC LISTED ON THE QUALIFIED PRODUCTS LIST MAY BE USED. ANY PRODUCTS LISTED ON THE QUALIFIED PRODUCTS LIST AS AN APPROVED ALTERNATE MAY ALSO BE USED.

(M) SILT FENCE SHALL BE PAID FOR UNDER ITEM NUMBER 209-08.03 TEMPORARY SILT FENCE (WITHOUT BACKING) PER LINEAR FOOT. PAYMENT SHALL INCLUDE ALL MATERIALS AND LABOR NECESSARY FOR CONSTRUCTION, MAINTENANCE, AND REMOVAL OF THE SILT FENCE.

(N) SEDIMENT SHALL BE REMOVED FROM BEHIND THE SILT FENCE WHEN IT HAS ACCUMULATED TO ONE-HALF THE ORIGINAL HEIGHT OF THE STRUCTURE AND PAID FOR UNDER ITEM NUMBER 209-05, SEDIMENT REMOVAL PER CUBIC YARD.

MINOR REVISION -- FHWA APPROVAL NOT REQUIRED.

NOT TO SCALE

STATE OF TENNESSEE
DEPARTMENT OF
TRANSPORTATION

SILT FENCE

12-18-02 EC-STR-3B

REV. 12-18-95: CHANGED DRAWING NO. FROM ESC-STR-11 TO EC-STR-11.

- REV.5-27-01: CHANGED ITEM NOS. 303-15.01 TO 303-10.01 AND 740-03.01 TO 740-10.03. CHANGED DESCRIPTION FOR ITEM NOS. 709-05.05, 709-05.06, AND 709-05.07.
- REV. 12-18-02: CHANGED GENERAL NOTE(D).
- REV. 1-22-03: ADDED ADDITIONAL GEOTEXTILE FABRIC TO ALL SECTIONAL VIEW.
- REV. 4-15-06: REFORMATTED SHEET, REVISED NOTES, MISC. EDITS TO DRAWING.
- REV. 4-1-08: REMOVED DITCH AND CHANNEL APPLICATION, RENAMED DRAWING, REVISED NOTES, MISC. EDITS TO DRAWING.
- REV. 8-1-12: MINOR EDITS TO GENERAL NOTES.
- REV. 3-16-17: CORRECTED PAY ITEM NO. 209-05.

DETAIL FOR UP TO 36" PIPE SIZE

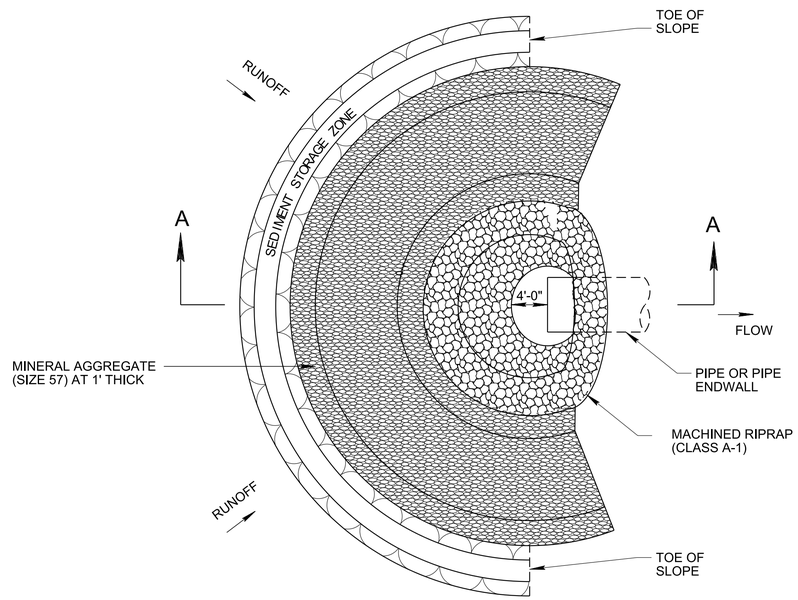

DETAIL FOR 18" TO 24" PIPE SIZE

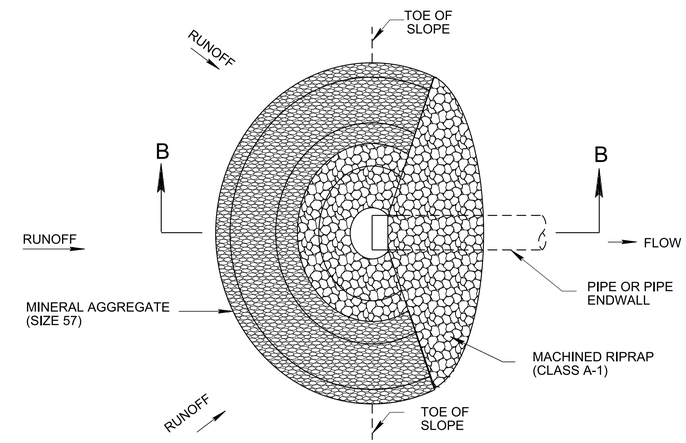

PLAN VIEW

PLAN VIEW

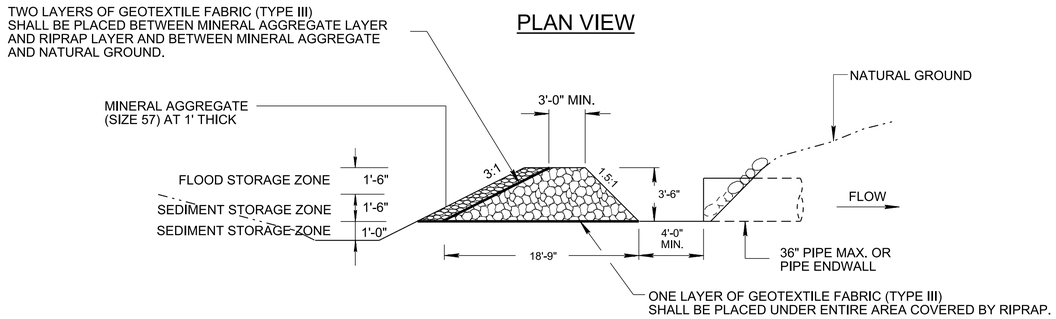

SECTION A - A

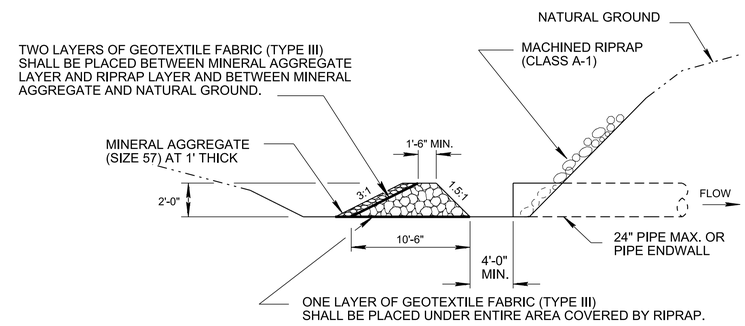

SECTION B - B

CULVERT PROTECTION TYPE 1 GENERAL NOTES

(A) CULVERT PROTECTION (TYPE 1) MAY BE USED AROUND A CULVERT INLET TO REDUCE FLOW VELOCITIES TO ALLOW SEDIMENTS TO DROP OUT. IT IS NORMALLY USED WHERE ALL OF THE INFLOW TO THE CULVERT IS ON-SITE RUNOFF. IT MAY ALSO BE USED WHERE A FILTRATION FUNCTION FOR VERY LOW FLOWS IS DESIRED.

(B) CULVERT PROTECTION (TYPE I) SHALL NOT BE USED IN STREAMS OR OTHER NATURAL WATER RESOURCES, UNLESS PROVIDED FOR IN THE PERMITS.

(C) CULVERT PROTECTION (TYPE I) SHOULD NOT BE USED IN DITCHES, SWALES, OR OTHER DEPRESSIONS WITH A DEPTH GREATER THAN 1 FOOT.

(D) CULVERT PROTECTION (TYPE1) SHOULD NOT BE USED AT THE CULVERT OUTLET.

(E) WHERE CONDITIONS OF HIGH SEDIMENT FLOW EXIST, MACHINED RIPRAP (CLASS A-3) MAY BE USED IN LIEU OF MACHINED RIPRAP (CLASS A-1) FOR PIPES UP TO 24 INCHES IN DIAMETER WITH A DRAINAGE AREA LESS THAN 3 ACRES. IT MAY ALSO BE USED FOR PIPE FROM 24 INCHES IN DIAMETER WITH A DRAINAGE AREA LESS THAN 6 ACRES.

(F) AT MOST SITES, THE MAXIMUM ALLOWABLE DRAINAGE AREA SHALL BE 30 ACRES. AT SITES WHICH DRAIN TO EXCEPTIONAL TENNESSEE WATERS OR SEDIMENT-IMPAIRED STREAMS, THE MAXIMUM ALLOWABLE DRAINAGE AREA SHALL BE 20 ACRES.

(G) ONLY GEOTEXTILE FABRIC (TYPE III) LISTED ON THE QUALIFIED PRODUCTS LIST SHALL BE USED.

(H) CULVERT PROTECTION (TYPE 1) SHALL BE PAID FOR UNDER THE FOLLOWING ITEM NUMBERS:

203-01	ROAD & DRAINAGE EXCAVATION (UNCLASSIFIED) PER CUBIC YARD
303-10.01	MINERAL AGGREGATE (SIZE 57) PER TON
709-05.05	MACHINED RIPRAP (CLASS A-3) PER TON
709-05.06	MACHINED RIPRAP (CLASS A-1) PER TON
740-10.03	GEOTEXTILE (TYPE III) (EROSION CONTROL) PER SQUARE YARD

PAYMENT SHALL INCLUDE ALL MATERIALS AND LABOR NECESSARY FOR CONSTRUCTION, MAINTENANCE, AND REMOVAL OF CULVERT PROTECTION (TYPE 1).

(I) SEDIMENT SHALL BE REMOVED FROM BEHIND THE CULVERT PROTECTION (TYPE 1) WHEN IT HAS ACCUMULATED TO ONE-HALF THE ORIGINAL HEIGHT OF THE STRUCTURE AND PAID FOR UNDER ITEM NUMBER 209-05, SEDIMENT REMOVAL PER CUBIC YARD.

EROSION CONTROL PLAN LEGEND: CULVERT PROTECTION (TYPE 1)

MINOR REVISION -- FHWA APPROVAL NOT REQUIRED.

NOT TO SCALE

STATE OF TENNESSEE
DEPARTMENT OF TRANSPORTATION

CULVERT PROTECTION TYPE 1

10-26-92

EC-STR-11

REV. 8-1-12: MINOR EDITS TO GENERAL NOTES.

REV. 3-16-17: CORRECTED PAY ITEM NO. 805-01.69.

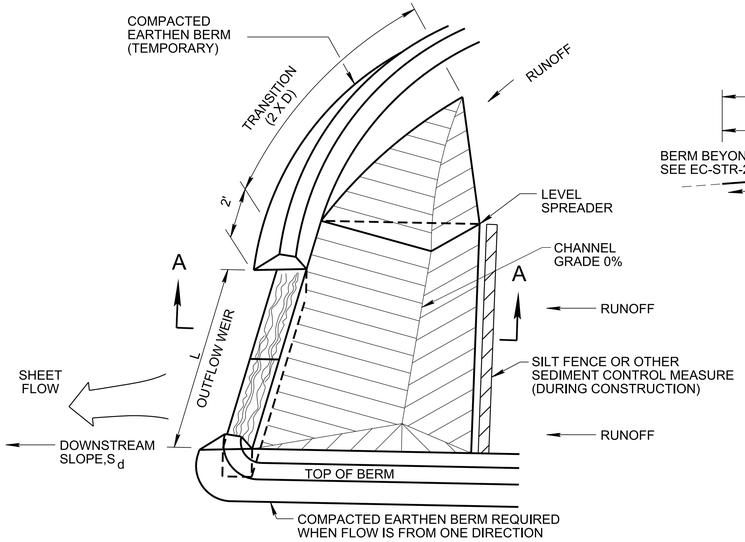

NOTE: ALL TEMPORARY BERMS, SWALES AND LEVEL SPREADER DITCH MUST RECEIVE TEMPORARY SEEDING IMMEDIATELY AFTER INSTALLATION

PERSPECTIVE VIEW

(APPLICATION WITH TEMPORARY BERM)

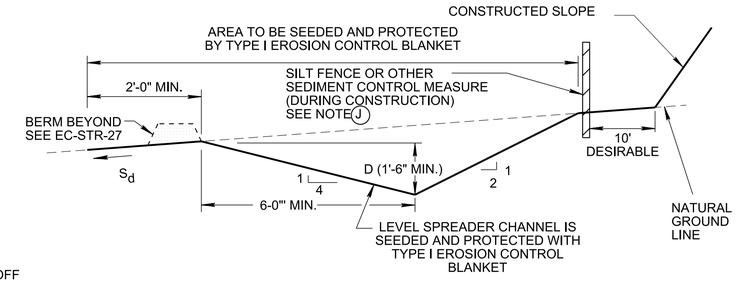

SECTION A - A
TYPE 1 WEIR

(TEMPORARY APPLICATION)

MINIMUM LEVEL SPREADER CHANNEL DEPTH "D" IN FEET

DESIGN DISCHARGE Q (cfs)	DOWNSTREAM SLOPE, S_d IN PERCENT (%)			
	0%-4%	4%-6%	6%-8%	8%-10%
1	1.5	1.5	1.5	1.5
2	1.5	1.5	1.7	2.0
4	1.5	1.8	2.5	3.0
7	1.9	2.5	3.5	4.1
10	2.3	3.1	4.2	*
15	3.0	3.9	*	*
20	3.5	4.5	*	*
25	3.9	5.2	*	*
30	4.3	5.7	*	*
35	4.7	6.2	*	*
40	5.1	6.7	*	*
45	5.5	*	*	*
50	5.8	*	*	*

* = NOT RECOMMENDED

UNIT WEIR FLOW RATES IN CFS/LF

DOWNSTREAM SLOPE, S_d IN PERCENT (%)			
0%-4%	4%-6%	6%-8%	8%-10%
0.49	0.20	0.07	0.04

WEIR LENGTH "L" = DESIGN Q IN CFS DIVIDED BY UNIT WEIR FLOW IN CFS/LF

MINIMUM WEIR LENGTH = 4 FEET

WEIR LENGTH > 200 FEET IS NOT RECOMMENDED

EXAMPLE: DESIGN Q = 7 cfs
S_d = 6%

THUS, L = 7/0.20 = 35 FEET
D = 2.5 FEET

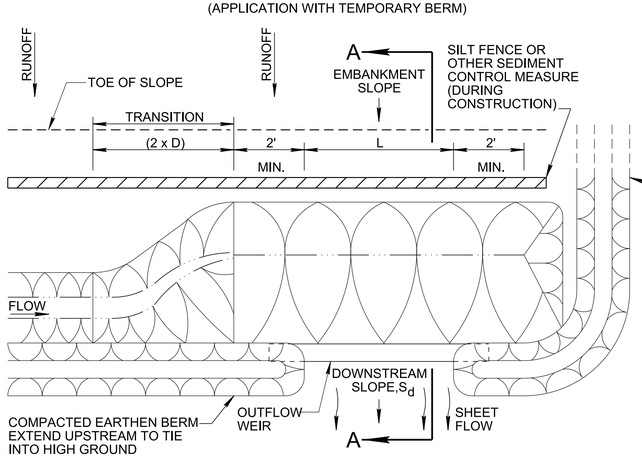

PLAN VIEW

(APPLICATION WITH SIDE DITCH FROM ONE DIRECTION)

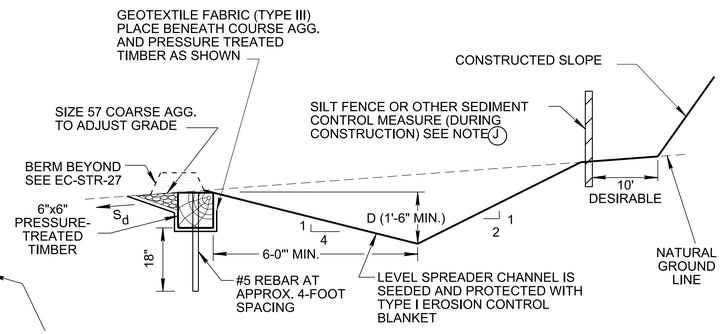

SECTION A - A
TYPE 2 WEIR

(TEMPORARY APPLICATION)

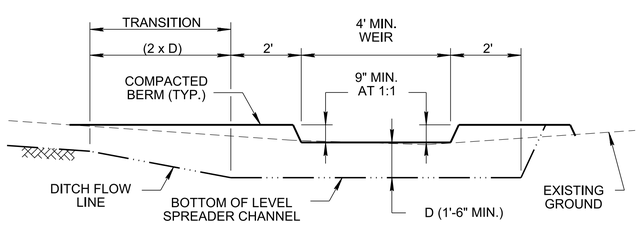

PROFILE VIEW (HORIZONTAL)

(APPLICATION WITH SIDE DITCH FROM ONE DIRECTION)

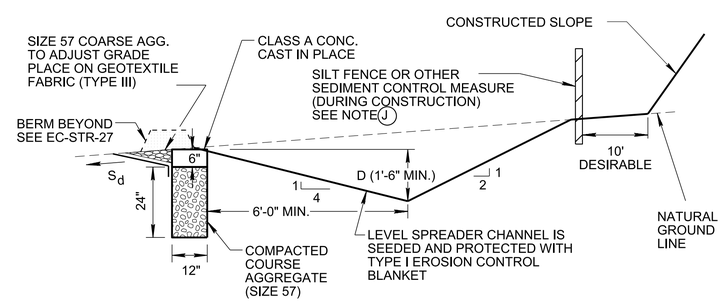

SECTION A - A
TYPE 3 WEIR

(PERMANENT APPLICATION)

LEVEL SPREADER GENERAL NOTES

(A) LEVEL SPREADERS INCLUDE A LEVEL CHANNEL AND WEIR WHICH RECEIVE CONCENTRATED INFLOW AND RELEASE IT IN A SHEET FLOW CONDITION. THEY CAN BE USED ON A TEMPORARY BASIS IN COMBINATION WITH TEMPORARY EPSC MEASURES OR ON A PERMANENT BASIS WITH SIDE DITCHES OR OTHER STORM WATER CONVEYANCES. LEVEL SPREADERS MAY ACCEPT CONCENTRATED INFLOWS FROM ONE OR BOTH ENDS.

(B) LEVEL SPREADERS MAY BE USED WHERE THE SLOPE DOWNSTREAM OF THE WEIR Sd IS UNIFORM AND IS AT A GRADE OF 10% OR LESS. UNDER IDEAL CONDITIONS, A UNIT SHEET FLOW RATE OF 0.49 CFS/LF CAN BE ALLOWED ON DOWNSTREAM SLOPES UP TO 4% HOWEVER, WHERE DOWNSTREAM VEGETATION IS SPARSE OR Sd EXCEEDS 4%, THE WEIR LENGTH SHOULD BE INCREASED AS INDICATED BY THE TABLE OF UNIT WEIR FLOW RATES.

(C) THE WEIR AND CHANNEL MUST BE LEVEL TO WITHIN 1/8 INCH PER 10 LF OF WEIR, AND THUS MUST BE INSTALLED ALONG THE CONTOUR OF THE SLOPE. NON-LINEAR HORIZONTAL ALIGNMENTS (CURVED WEIRS) ARE PERMISSIBLE.

(D) IN GENERAL, LEVEL SPREADERS FOR TEMPORARY USE SHALL BE DESIGNED FOR THE 2-YEAR STORM EVENT. AT LOCATIONS WHICH DRAIN TO EXCEPTIONAL TENNESSEE WATERS OR SEDIMENT-IMPAIRED STREAMS, TEMPORARY LEVEL SPREADERS SHALL BE DESIGNED FOR THE 5-YEAR EVENT. LEVEL SPREADERS FOR PERMANENT USE SHALL BE DESIGNED FOR THE 10-YEAR STORM EVENT.

(E) WEIR LENGTH SHALL BE DETERMINED ON THE BASIS OF THE ALLOWABLE DISCHARGE PER FOOT OF WEIR LENGTH, AS PROVIDED IN THE TABLE "UNIT WEIR FLOW RATES." THE WEIR LENGTH SHALL BE DETERMINED BY DIVIDING THE DESIGN DISCHARGE BY THE ALLOWABLE UNIT FLOW RATE. THE MINIMUM WEIR LENGTH SHALL BE 4 FEET. WEIR LENGTHS GREATER THAN 200 FEET ARE NOT RECOMMENDED.

(F) TYPE 3 WEIRS SHALL BE CONSIDERED FOR PERMANENT USE AND SHALL BE CONSTRUCTED OF CAST -IN-PLACE CONCRETE. TYPE 2 AND 3 WEIRS SHALL BE FOR TEMPORARY USE. A TYPE 2 WEIR SHALL BE CONSTRUCTED WITH 6"X6" PRESSURE-TREATED TIMBERS. A TYPE 1 WEIR CONSTRUCTED FROM GRADED EARTH AND EROSION CONTROL BLANKET MAY BE USED FOR WEIR LENGTHS OF 10 FEET OR LESS.

(G) WHEN LEVEL SPREADERS ARE USED IN CONJUNCTION WITH A ROADWAY SIDE DITCH, A COMPACTED BERM SHALL BE PROVIDED ON THE SIDE OF THE DITCH IN ORDER TO ENSURE THAT OUTFLOWS OCCUR OVER THE WEIR. THE MINIMUM HEIGHT OF THE BERM SHALL BE 6 INCHES AND IT SHALL BE EXTENDED UPSTREAM TO A POINT WHERE THE EXISTING GROUND IS SUFFICIENTLY HIGH TO INTERCEPT THE TOP OF THE BERM.

(H) WHEN LEVEL SPREADERS RECEIVE FLOWS FROM ONE END, THE OPPOSITE END OF THE STRUCTURE SHALL BE PROVIDED WITH A COMPACTED BERM A MINIMUM OF 9 INCHES HIGH IN ORDER TO PREVENT OVERFLOWS. (SEE EC-STR-27)

(I) PERMANENT INSTALLATIONS SHALL BE MARKED WITH DELINEATOR POSTS IN ORDER TO IMPROVE SAFETY FOR MAINTENANCE DIVISION MOWING CREWS.

(J) LEVEL SPREADERS ARE NOT SEDIMENT CONTROL DEVICES. DURING CONSTRUCTION, THE BACK SLOPE SHOULD BE PROVIDED WITH SILT FENCE OR OTHER SUITABLE SEDIMENT CONTROL MEASURES. THESE SEDIMENT CONTROL DEVICES SHALL BE INSTALLED ACCORDING TO THE APPLICABLE STANDARD DRAWINGS.

(K) GEOTEXTILE FABRIC (TYPE III) SHALL MEET REQUIREMENTS OF THE STANDARD SPECIFICATIONS FOR GEOTEXTILES AASHTO DESIGNATION M-288, EROSION CONTROL.

(L) LEVEL SPREADERS SHALL BE PAID FOR UNDER THE FOLLOWING ITEM NUMBER:
805-01.69 LEVEL SPREADERS PER EACH. PAYMENT SHALL INCLUDE ALL MATERIALS AND LABOR NECESSARY FOR THE CONSTRUCTION AND MAINTENANCE OF THE LEVEL SPREADERS.

(M) THE DESIGN LIFE FOR A TEMPORARY INSTALLATION IS CONSIDERED TO BE ONE YEAR. INSPECT AFTER SIGNIFICANT RUNOFF EVENTS TO ENSURE THAT THE WEIR IS FREE OF DEBRIS. IMMEDIATELY REMOVE ANY SEDIMENT WHICH HAS COLLECTED IN THE LEVEL SPREADER CHANNEL. IF IN PLACE DURING THE WINTER MONTHS, INSPECT AFTER EACH FREEZE/THAW CYCLE TO ENSURE THAT THE WEIR IS STILL LEVEL.

EROSION CONTROL PLAN LEGEND:

LEVEL SPREADER (DUAL DIRECTION) LS

LEVEL SPREADER (SINGLE DIRECTION) LS

MINOR REVISION -- FHWA APPROVAL NOT REQUIRED.

NOT TO SCALE

STATE OF TENNESSEE
DEPARTMENT OF TRANSPORTATION

LEVEL SPREADERS

2-1-08 EC-STR-61

29-JUN-2017 14:26
\\AG03SDCWF00008.net.ads.state.tn.us\13SHARED\StandDraw\Working Folder For Eugene\backup d\pak on Jj96208\WORKSTD\2017 std dwg\ECSTR61-20170316.dgn

REV. 10-15-02: NEW SHEET. REPLACES RD-TS-2

REV. 3-16-17: UPDATED DESIGN LOADING TO HL-93. UPDATED GENERAL NOTE C, "2002" TO "2011". UPDATED FOOTNOTE③ "RD01-S-12" TO "S-CZ-1" AND "2002" TO "2011". UPDATED FOOTNOTE ⑫. REMOVED DETAIL A.

DESIGN LOADING: ALL NEW AND REHABILITATED BRIDGES SHALL BE DESIGNED FOR HL-93 LOADING.

FOR NEW ROUTE CONSTRUCTION OR ROUTE RECONSTRUCTION PROJECTS:

THE MINIMUM CLEAR WIDTH FOR NEW BRIDGES SHALL BE EQUAL TO THE FULL WIDTH OF THE APPROACH ROADWAY (CURB-TO-CURB OR FULL SHOULDER WIDTH AS APPLICABLE).

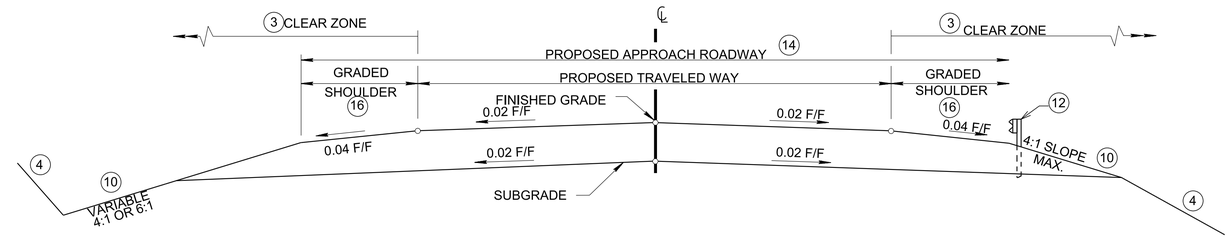

TANGENT SECTION

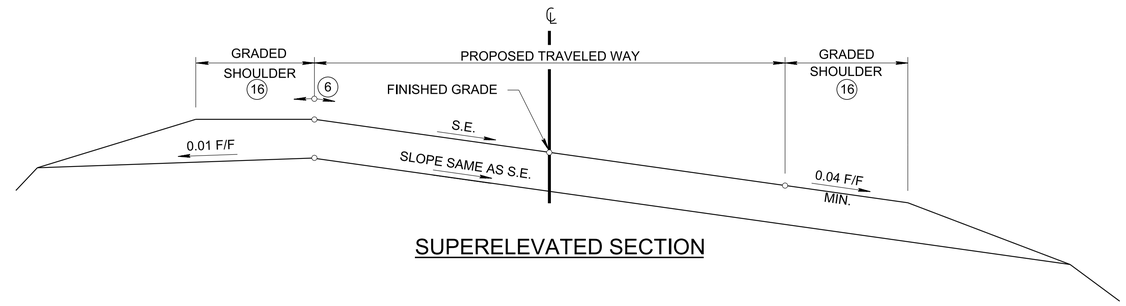

SUPERELEVATED SECTION

TABLE I. MINIMUM CLEAR ROADWAY WIDTHS AND DESIGN LOADINGS FOR NEW AND RECONSTRUCTED BRIDGES (SEE PAGE 430)

DESIGN ADT (VEH/DAY)	DESIGN LOADING	MINIMUM CLEAR ROADWAY WIDTH OF BRIDGE ①
UNDER 400	HL-93	TRAVELED WAY + 4 FT. (2 FT. EACH SIDE)
400 TO 1,500	HL-93	TRAVELED WAY + 6 FT. (3 FT. EACH SIDE)
1,500 TO 2,000	HL-93	TRAVELED WAY + 8 FT. (4 FT. EACH SIDE)
OVER 2,000	HL-93	APPROACH ROADWAY WIDTH

TABLE II. MINIMUM STRUCTURAL CAPACITIES AND MINIMUM ROADWAY WIDTHS FOR BRIDGES TO REMAIN IN PLACE (SEE PAGE 431) ②

DESIGN ADT (VEH/DAY)	DESIGN LOADING (STRUCTURAL CAPACITY)	MINIMUM CLEAR ROADWAY WIDTH (FT.) ⑤
UNDER 400	H-15	22
400 - 1,500	H-15	22
1,500 - 2,000	H-15	24
OVER 2,000	H-15	28

TABLE III. MINIMUM DESIGN SPEEDS FOR RURAL COLLECTOR ROADS (SEE PAGE 426)

TYPE OF TERRAIN	MINIMUM DESIGN SPEED (MPH) FOR SPECIFIED DESIGN ADT (VEH/DAY)		
	0-400	400-2,000	OVER 2,000
LEVEL	40	50	60
ROLLING	30	40	50
MOUNTAINOUS	20 ⑦	30	40

TABLE IV. COLLECTOR ROADS AND STREETS - DESIGN STANDARDS ⑬

DESIGN STANDARDS (FOR GIVEN DESIGN SPEED)		DESIGN SPEEDS (MPH) 20	25	30	35	40	45	50	55	60	MINIMUM WIDTH OF SHOULDERS FOR ALL SPEEDS (FEET) (SEE PAGE 429)
MINIMUM WIDTH OF TRAVELED WAY IN RURAL AREAS (FT.) (SEE PAGE 429) ⑧	DESIGN ADT UNDER 400	20 ⑨	20 ⑨	20 ⑨	20 ⑨	20 ⑨	20	20	22	22	4
	DESIGN ADT 400 - 1,500	22	22	22	22	22	22	22	22	22	4
	DESIGN ADT 1,500 - 2,000	22	22	22	22	22	22	22	24	24	6
	DESIGN ADT OVER 2,000	24	24	24	24	24	24	24	24	24	8
MINIMUM RADIUS (FT.) 0.04 MAX. S.E.		125	205	300	420	565	730	930	1190	1505	SEE PAGE 145
MINIMUM RADIUS (FT.) 0.06 MAX. S.E.		115	185	275	380	510	660	835	1065	1340	
MINIMUM RADIUS (FT.) 0.08 MAX. S.E.		105	170	250	350	465	600	760	965	1205	
MAXIMUM RURAL GRADES % ⑪	LEVEL TERRAIN	7	7	7	7	7	7	6	6	5	SEE PAGE 427
	ROLLING TERRAIN	10	10	9	9	8	8	7	7	6	
	MOUNTAINOUS TERRAIN	12	11	10	10	10	10	9	9	8	
MAXIMUM URBAN GRADES % ⑪	LEVEL TERRAIN	9	9	9	9	9	8	7	7	6	SEE PAGE 436
	ROLLING TERRAIN	12	12	11	10	10	9	8	8	7	
	MOUNTAINOUS TERRAIN	14	13	12	12	12	11	10	10	9	
MINIMUM STOPPING SIGHT DISTANCE (FT.)		115	155	200	250	305	360	425	495	570	SEE PAGE 426
MINIMUM "K" VALUE	CREST VERTICAL CURVE	7	12	19	29	44	61	84	114	151	
	SAG VERTICAL CURVE	17	26	37	49	64	79	96	115	136	
MINIMUM PASSING SIGHT DISTANCE (FT.)		710	900	1090	1280	1470	1625	1835	1985	2135	SEE PAGE 427
MINIMUM "K" VALUE FOR CREST VERTICAL CURVE		180	289	424	585	772	943	1203	1407	1628	
SUPERELEVATION		SEE STANDARD DRAWINGS RD01-SE-2 AND RD01-SE-3									

GENERAL NOTES

Ⓐ FOR SPECIFIC CONDITIONS NOT COVERED ON THIS SHEET, REFERENCE SHOULD BE MADE TO "A POLICY ON GEOMETRIC DESIGN OF HIGHWAYS AND STREETS," AASHTO, 2001.

Ⓑ PAGE NUMBERS REFERRED TO ON THIS DRAWING ARE FROM "A POLICY ON GEOMETRIC DESIGN OF HIGHWAYS AND STREETS," AASHTO, 2001, UNLESS OTHERWISE NOTED.

Ⓒ REFERENCE SHOULD ALSO BE MADE TO THE "ROADSIDE DESIGN GUIDE," AASHTO, 2011.

Ⓓ FOR URBAN DESIGN GUIDANCE AND CRITERIA, SEE PAGES 433-444.

Ⓔ DESIRABLE RIGHT-OF-WAY IS SLOPE LINES PLUS FIFTEEN FEET.

Ⓕ FOR RURAL INTERSECTION DESIGN, SEE PAGE 432.

Ⓖ IF NO ABOVE GROUND UTILITIES ARE INVOLVED, MINIMUM RIGHT-OF-WAY SHALL BE TRAVELED WAY PLUS CLEAR ZONE.

Ⓗ IF ABOVE GROUND UTILITIES ARE INVOLVED, MINIMUM RIGHT-OF-WAY SHALL BE TO ACCOMMODATE THE UTILITIES OUTSIDE THE CLEAR ZONE.

Ⓘ FOR URBAN INTERSECTION DESIGN, SEE PAGE 442.

FOOTNOTES

① WHERE THE APPROACH ROADWAY WIDTH (TRAVELED WAY PLUS SHOULDERS) IS SURFACED, THAT SURFACE WIDTH SHOULD BE CARRIED ACROSS THE STRUCTURE.

② THESE STRUCTURES SHOULD BE ANALYZED INDIVIDUALLY, TAKING INTO CONSIDERATION THE CLEAR WIDTH PROVIDED, TRAFFIC VOLUMES, REMAINING LIFE OF THE STRUCTURE, PEDESTRIAN VOLUMES, SNOW STORAGE, DESIGN SPEED, ACCIDENT RECORD, AND OTHER PERTINENT FACTORS.

③ THE CLEAR ZONE WIDTH SHALL BE DETERMINED FROM STANDARD DRAWING S-CZ-1. SEE THE "ROADSIDE DESIGN GUIDE," AASHTO, 2011 FOR FURTHER INFORMATION ON CLEAR ZONES.

④ SEE STANDARD DRAWINGS RD01-S-11 AND RD01-S-11B FOR DESIRABLE SLOPES AND NOTE REGARDING GEOLOGICAL RECOMMENDATIONS.

⑤ CLEAR WIDTH BETWEEN CURBS OR RAILS, WHICHEVER IS THE LESSER, SHOULD BE EQUAL TO OR GREATER THAN THE APPROACH TRAVELED WAY.

⑥ THE SLOPE OF THE SHOULDER AND THE ROADWAY PAVEMENT SHALL NOT EXCEED AN ALGEBRAIC DIFFERENCE OF 0.07 FOOT PER FOOT.

⑦ EFFORTS SHOULD BE MADE TO SELECT A DESIGN SPEED GREATER THAN 20 MILES PER HOUR. REFER TO PAGE 426 OF THE "POLICY ON GEOMETRIC DESIGN OF HIGHWAYS AND STREETS," AASHTO, 2001, FOR FURTHER INFORMATION.

⑧ ON ROADWAYS TO BE RECONSTRUCTED, THE 22 FEET TRAVELED WAY MAY BE RETAINED WHERE THE ALIGNMENT AND SAFETY RECORDS ARE SATISFACTORY.

⑨ AN 18 FEET MINIMUM WIDTH MAY BE USED FOR ROADWAYS WITH DESIGN ADT UNDER 250 VEHICLES PER DAY.

⑩ DESIGN ADTS OVER 400 AND DESIGN SPEEDS OF 50 MILES PER HOUR AND GREATER SHALL REQUIRE 6:1 FORESLOPES, AND 3'-6" DEPTH DITCHES INSTEAD OF 2'-0" DITCHES.

⑪ SHORT LENGTHS OF GRADE IN RURAL AND URBAN AREAS, SUCH AS GRADES LESS THAN 500 FEET IN LENGTH, ONE-WAY DOWNGRADES, AND GRADES ON LOW-VOLUME RURAL OR URBAN COLLECTORS MAY BE UP TO 2 PERCENT STEEPER THAN THE GRADES SHOWN IN TABLE IV.

⑫ SEE DETAIL S-PL-6 FOR TYPICAL GUARDRAIL PLACEMENT DETAILS.

⑬ ALTHOUGH THE SELECTED DESIGN SPEED ESTABLISHES THE LIMITING VALUES OF CURVE RADIUS AND MINIMUM SIGHT DISTANCE THAT SHOULD BE USED IN DESIGN, THERE SHOULD BE NO RESTRICTION ON THE USE OF FLATTER HORIZONTAL CURVES OR GREATER SIGHT DISTANCES WHERE SUCH IMPROVEMENTS CAN BE PROVIDED AS A PART OF AN ECONOMICAL DESIGN (SEE PAGE 69).

⑭ PROPOSED ROADWAY WIDTH WILL NOT BE LESS THAN EXISTING WIDTH.

⑮ WHEN GUARDRAIL IS PLACED BEHIND CURB AND GUTTER, THE SLOPING CURB HEIGHT MUST BE 4 INCHES OR LESS.

⑯ SHOULDER SURFACE TREATMENT TO BE SPECIFIED BY THE DESIGN DIVISION'S PAVEMENT DESIGN SECTION. DESIGNERS SHOULD REFER TO THE DESIGN GUIDELINES FOR PAVEMENT REQUEST PROCEDURES. WHEN SHOULDERS ARE PAVED AND GRADED SHOULDER WIDTH IS 6 FEET OR GREATER, THE SHOULDER SHOULD BE PAVED THE GRADED SHOULDER WIDTH MINUS TWO FEET. WHEN SHOULDERS ARE PAVED AND THE GRADED SHOULDER WIDTH IS LESS THAN 6 FEET, THE SHOULDER SHOULD BE PAVED THE WIDTH OF THE GRADED SHOULDER.

STATE OF TENNESSEE
DEPARTMENT OF TRANSPORTATION

DESIGN STANDARDS FOR COLLECTOR ROADS AND STREETS

10-15-02 | RD01-TS-2

REV. 6-15-12: CORRECTED DESIGN NOTES④ RENAMED SHEET FROM RD-TS-8.

REV. 4-8-16: GENERAL REVISION.

REV. 3-16-17: CORRECTED "S-PBR-1" TO "S-BPR-1" IN GENERAL NOTE Ⓒ. ADDED GENERAL NOTE Ⓠ.

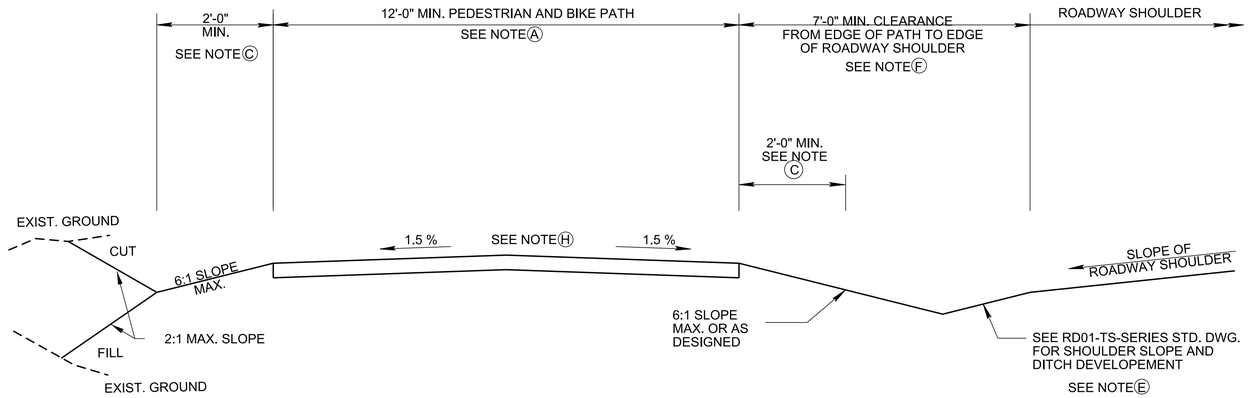

TYPICAL X- SECTION FOR TWO-WAY SHARED USE PATH
(WITHOUT CONCRETE BARRIER)

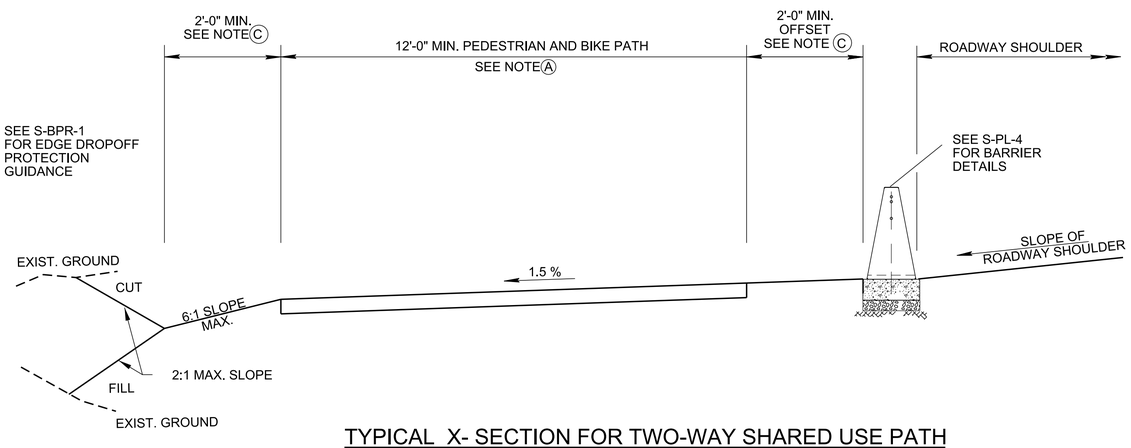

TYPICAL X- SECTION FOR TWO-WAY SHARED USE PATH
(WITH CONCRETE BARRIER)

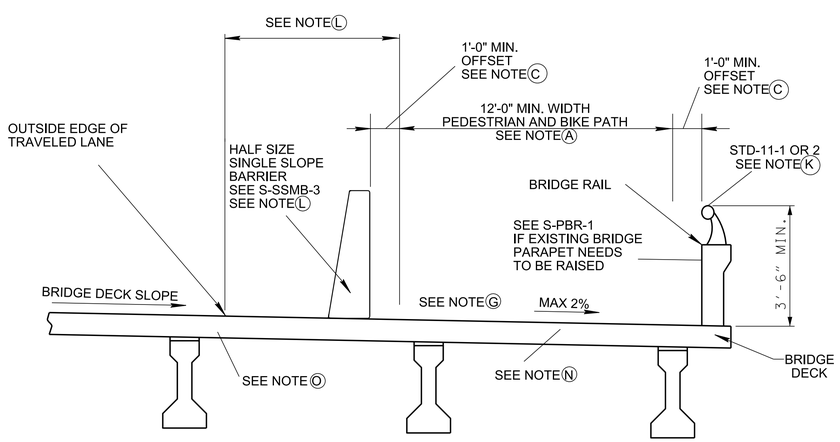

TYPICAL BRIDGE X-SECTION FOR SHARED USE PATH

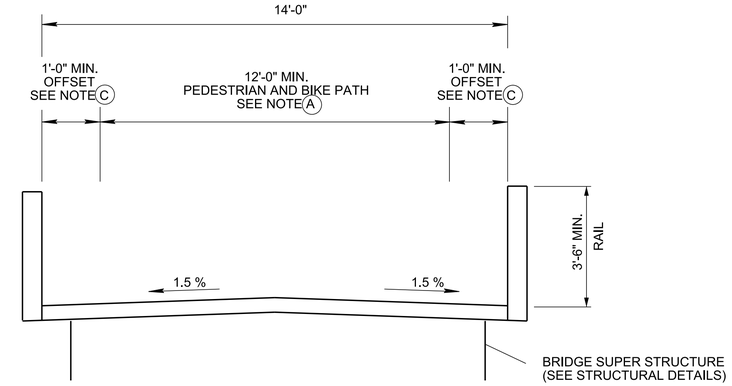

TYPICAL BRIDGE X-SECTION FOR SEPARATE SHARED USE PATH

DESIGN NOTES

1. THE PURPOSE OF THIS STANDARD IS TO PROVIDE MINIMUM DESIGN STANDARDS FOR NON-MOTORIZED TRANSPORTATION FACILITIES. ALL FACILITIES SHALL BE DESIGNED FOR ADA ACCESSIBILITY.
2. BICYCLE FACILITY DESIGN NOTE: ALL SHARED USE PATHS SHOULD MEET AASHTO "GUIDE FOR THE DEVELOPMENT OF BICYCLE FACILITIES" FOR GEOMETRIC DESIGN REQUIREMENTS.

GENERAL NOTES

- Ⓐ THE MINIMUM WIDTH OF A BI-DIRECTIONAL SHARED USE PATH IS 12' HOWEVER, UNDER CERTAIN CONDITIONS IT MAY BE NECESSARY TO REDUCE THE WIDTH OF A SHARED USE PATH TO 10 FEET. MIN. 14 FEET SHOULD BE CONSIDERED AT LOCATIONS WHERE SUBSTANTIAL USE BY BICYCLE, JOGGERS, SKATERS AND PEDESTRIANS, OR MAINTENANCE VEHICLES EXPECTED.
- Ⓑ THE MINIMUM WIDTH OF A ONE -DIRECTIONAL SHARED USE PATH IS 6 FEET.
- Ⓒ 2 FEET OR MORE IS DESIRABLE TO PROVIDE LATERAL OFFSET FROM TREES, POLES, WALLS, FENCES, GUARDRAILS, OR OTHER FIXED OBSTRUCTIONS. WHERE THE PATH IS ADJACENT TO CANALS, DITCHES OR SLOPES, SEE S-BPR-1 TO DETERMINE IF SAFETY RAIL IS NEEDED. THE OFFSET MAY BE REDUCED TO 1' AT EXTREME SITE CONDITIONS, SUCH AS AT BRIDGES.
- Ⓓ THE VERTICAL CLEARANCE TO OBSTRUCTIONS SHOULD BE A MINIMUM OF 8'-6". HOWEVER, VERTICAL CLEARANCE MAY NEED TO BE GREATER TO PERMIT PASSAGE OF MAINTENANCE AND EMERGENCY VEHICLES. IN UNDER CROSSINGS AND TUNNELS, 10 FEET IS DESIRABLE FOR ADEQUATE VERTICAL SHY DISTANCE.
- Ⓔ DITCH SHOULD BE LOCATED BETWEEN THE SHARED USE PATH AND ROADWAY TO ENSURE THAT WATER DOES NOT FLOW ONTO THE ROADWAY OR SHOULDER. ALSO, DITCH SHOULD BE SUFFICIENT ENOUGH TO REMOVE THE ADDITIONAL RUNOFF.
- Ⓕ MINIMUM 7' HORIZONTAL OFFSET BETWEEN THE EDGE OF SHOULDER AND THE EDGE OF SHARED USE PATH IS REQUIRED FOR FACILITIES > 45 MPH. IF 7' HORIZONTAL OFFSET CAN NOT BE ACHIEVED, A CONCRETE BARRIER IS REQUIRED.
- Ⓖ ON ALL BRIDGE DECKS, SPECIAL CARE SHALL BE TAKEN TO ENSURE THAT BICYCLE- SAFE EXPANSION JOINTS ARE USED AND DECKING MATERIALS THAT MAY BECOME SLIPPERY WHEN WET ARE AVOIDED. ADA COMPLIANT DECKING MATERIALS SHALL BE USED.
- Ⓗ SEE ROADWAY PLANS FOR PAVEMENT DETAILS.
- Ⓘ SEE STD. DWG. T-M-10 FOR SIGNING AND PAVEMENT MARKINGS.
- Ⓙ CLEAR ZONE SHOULD BE MAINTAINED BETWEEN THE ROADWAY AND THE SHARED USE PATH. IF CLEAR ZONE CANNOT BE ACHIEVED, AN APPROPRIATE BARRIER SHALL BE USED.
- Ⓚ IF CONCRETE BARRIER IS PROPOSED, BRIDGE PARAPET RAIL MAY BE REPLACED WITH S-BPR-1. IF THE BRIDGE CROSSES OVER AN ACCESS CONTROLLED FACILITY, THE BRIDGE SHALL HAVE AN MIN. 8' TALL SAFETY FENCE.
- Ⓛ IF MINIMUM 7'-0" OFFSET CANNOT BE MAINTAINED ON BRIDGE DECKS, A BARRIER IS REQUIRED FOR SPEEDS > 45 MPH, A BARRIER SHALL BE CONSIDERED ON A CASE BY CASE BASIS FOR SPEEDS <45 MPH.
- Ⓜ FOR REHABILITATION PROJECTS, EXISTING BRIDGE STRUCTURE SHALL BE EVALUATED.
- Ⓝ FOR REHABILITATION PROJECTS, IF EXISTING BRIDGE SHOULDER IS TO BE UTILIZED, THE MAX. CROSS SLOPE SHALL NOT EXCEED 2%.
- Ⓞ FOR REHABILITATION PROJECTS, NEW BRIDGE DECK DRAINS MAY BE REQUIRED TO DIVERT ROADWAY PAVEMENT DRAINAGE AWAY FROM THE SHARED USE PATH.
- Ⓟ ALL ELEMENTS OF SHARED USE PATH SHALL COMPLY WITH ADA.
- Ⓠ WHERE PEDESTRIAN ACCESS ROUTES ARE NOT CONTAINED WITHIN A STREET OR HIGHWAY RIGHT-OF-WAY, THE GRADE OF THE PEDESTRIAN ACCESS ROUTES SHALL BE 5% MAXIMUM.

STATE OF TENNESSEE
DEPARTMENT OF TRANSPORTATION

SHARED
USE PATH
TYPICAL SECTIONS

5-1-07 | RD01-TS-8

STANDARD LEGEND

EXISTING		PROPOSED	
	LOOP DETECTOR WITH LEAD-IN		LOOP DETECTOR WITH LEAD-IN
	RADAR/VIDEO DETECTION AREA		RADAR/VIDEO DETECTION AREA
	VIDEO DETECTION CAMERA		VIDEO DETECTION CAMERA
	EMERGENCY VEHICLE DETECTOR		EMERGENCY VEHICLE DETECTOR
	POLE MOUNTED CONTROLLER		POLE MOUNTED CONTROLLER
	PAD MOUNTED CONTROLLER		PAD MOUNTED CONTROLLER
N	PEDESTRIAN SIGNAL HEAD WITH NUMBER	N	PEDESTRIAN SIGNAL HEAD WITH NUMBER
N	SIGNAL HEAD WITH NUMBER	N	SIGNAL HEAD WITH NUMBER WITHOUT BACKPLATE
N	SIGNAL HEAD WITH NUMBER AND BACKPLATE	N	SIGNAL HEAD WITH NUMBER AND BACKPLATE
	PULL BOX		PULL BOX
	FIBER OPTIC PULL BOX		FIBER OPTIC PULL BOX
EX 2" C	2" CONDUIT	2" C	2" CONDUIT
	STRAIN POLE FOR SIGNAL SUPPORT		STRAIN POLE FOR SIGNAL SUPPORT
	WOOD POLE FOR SIGNAL SUPPORT		WOOD POLE FOR SIGNAL SUPPORT

REV. 9-18-79: ADDED SIGNAL HEAD WITH NUMBER AND BACKPLATE, PEDESTRIAN PUSHBUTTON WITH NUMBER AND PAVEMENT ARROW TO EXISTING AND PROPOSED LEGEND.

REV. 1-11-82: ADDED EROSION CONTROL LEGEND.

REV. 8-21-89: ADDED WETLAND BOUNDARY.

REV. 1-19-91: REDREW SHEET AND ADDED SYMBOL FOR BOTH BELOW AND ABOVE GROUND SEDIMENT TRAPS.

REV. 10-26-94: CHANGED DRAWING NO. FROM RD-L-2 TO RD-L-3. ADDED LIGHTING SYMBOLS. MOVED WETLAND BOUNDARY SYMBOL TO DRAWING NO. RD-L-1. MOVED EROSION CONTROL SYMBOLS TO DRAWING NO. RD-L-4.

REV. 2-28-01: DELETED SYMBOL FOR EXISTING JACKED AND BORED CONDUIT WITH PULL BOXES.

4-15-04: CHANGED LEGEND FOR LOOP DECTOR WITH LEAD-IN. ADDED SYMBOLS FOR VIDEO DETECTION AREA, VIDEO DETECTION CAMERA, EMERGENCY VEHICLE DETECTOR, AND FIBER OPTIC PULL BOX. MOVED SYMBOLS BEGINNING WITH SYMBOL FOR GUYING DEVICE ANGLE ANCHOR TO NEW DRAWING NO. RD-L-4.

REV. 3-16-17: ADDED SYMBOL FOR EXISTING RADAR/VIDEO DETECTION AREA. ADDED "RADAR/" BEFORE "VIDEO DETECTION AREA". ADDED "WITHOUT BACKPLATE" AFTER "SIGNAL HEAD WITH NUMBER".

MINOR REVISION -- FHWA APPROVAL NOT REQUIRED.

STATE OF TENNESSEE
DEPARTMENT OF
TRANSPORTATION

STANDARD LEGEND FOR SIGNALIZATION AND LIGHTING

10-26-94 | RD-L-3

REV. 4-15-04: MOVED SYMBOLS BEGINNING WITH SYMBOL FOR GUYING DEVICE ANGLE ANCHOR FROM DRAWING NO. RD-L-3. ADDED SYMBOLS FOR PEDESTRION POLE FOR SINGLE AND DUAL PUSHBUTTON, DUAL ARM OFFSET TYPE LUMINAIRE AND POLE AND WALL MOUNTED UNDERPASS LIGHT.

REV. 3-16-17: ADDED "OR PUSHBUTTON POLE" AFTER "PEDESTRIAN POLE" ON FOUR INSTANCES.

STANDARD LEGEND

EXISTING		PROPOSED	
	GUYING DEVICE ANGLE ANCHOR		GUYING DEVICE ANGLE ANCHOR
	GUYING DEVICE VERTICAL ANCHOR		GUYING DEVICE VERTICAL ANCHOR
PB	PEDESTRIAN PUSHBUTTON	PB	PEDESTRIAN PUSHBUTTON
PB	PEDESTRIAN POLE OR PUSHBUTTON POLE FOR SINGLE PUSHBUTTON	PB	PEDESTRIAN POLE OR PUSHBUTTON POLE FOR SINGLE PUSHBUTTON
PB PB	PEDESTRIAN POLE OR PUSHBUTTON POLE FOR DUAL PUSHBUTTON	PB PB	PEDESTRIAN POLE OR PUSHBUTTON POLE FOR DUAL PUSHBUTTON
	HIGH MAST POLE WITH LUMINAIRES ON FULL RING		HIGH MAST POLE WITH LUMINAIRES ON FULL RING
	HIGH MAST POLE WITH LUMINAIRES ON HALF RING		HIGH MAST POLE WITH LUMINAIRES ON HALF RING
	SINGLE ARM OFFSET TYPE LUMINAIRE AND POLE		SINGLE ARM OFFSET TYPE LUMINAIRE AND POLE
	DUAL ARM OFFSET TYPE LUMINAIRE AND POLE		DUAL ARM OFFSET TYPE LUMINAIRE AND POLE
			WALL MOUNTED UNDERPASS LIGHT
	LIGHTING CONTROL CENTER		LIGHTING CONTROL CENTER
	RAILROAD - HIGHWAY CROSSING FLASHING SIGNAL		RAILROAD - HIGHWAY CROSSING FLASHING SIGNAL
	RAILROAD - HIGHWAY CROSSING FLASHING SIGNAL WITH AUTOMATIC GATE		RAILROAD - HIGHWAY CROSSING FLASHING SIGNAL WITH AUTOMATIC GATE
			JACKED OR BORED CONDUIT WITH PULL BOXES

MINOR REVISION -- FHWA APPROVAL NOT REQUIRED.

STATE OF TENNESSEE
DEPARTMENT OF
TRANSPORTATION

STANDARD LEGEND FOR SIGNALIZATION AND LIGHTING

4-15-04 RD-L-4

REV. 4-12-16: ADDED PAY ITEM.

REV. 3-16-17: CLARIFIED PAY ITEM LIMITS AT BOTH ENDS OF TRANSITION.

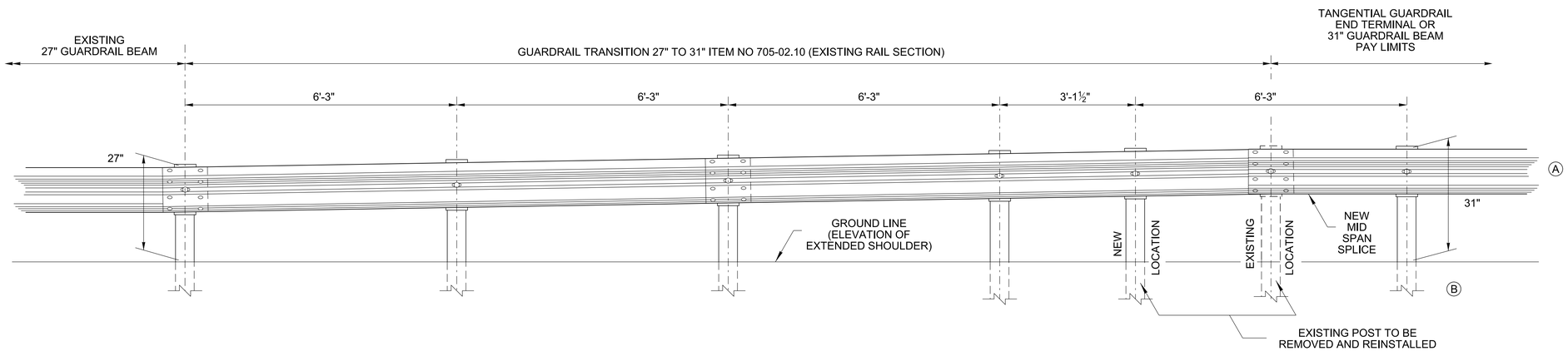

ELEVATION VIEW - PROFILE TAPER

MAXIMUM HEIGHT ADJUSTMENT SHOULD BE LIMITED TO 1" PER 6'-3" GUARDRAIL SECTION. MINIMUM HEIGHT TRANSITION SECTION SHOWN.

GENERAL NOTES

(A) THIS GUARDRAIL HEIGHT TRANSITION DETAIL MAY BE USED FOR GUARDRAIL REPAIRS, MAINTENANCE, AND BRIDGE REPAIR PROJECTS.

(B) POST NO. 8 OR POST NO. 4 IF USED FOR TRANSITION TO GUARDRAIL END TERMINAL (SEE S-GRT-2, S-GRT-3).

(C) WHERE FEASIBLE ADJUST THE EXISTING GUARDRAIL HEIGHT TO 28" MIN.

MINOR REVISION -- FHWA APPROVAL NOT REQUIRED.

STATE OF TENNESSEE
DEPARTMENT OF
TRANSPORTATION

SPECIAL CASE GUARDRAIL HEIGHT TRANSITION DETAIL

5-11-15

S-GRS-4

REV. 3-16-17: UPDATED REFERENCE TO STD. DWG. FROM "S-GRP-1" TO "S-PL-1". CORRECTED REF. TO STD. DWG. FROM "RD-S-11" TO "RD01-S-11" AND "RD-S-11A" TO "RD01-S-11A".

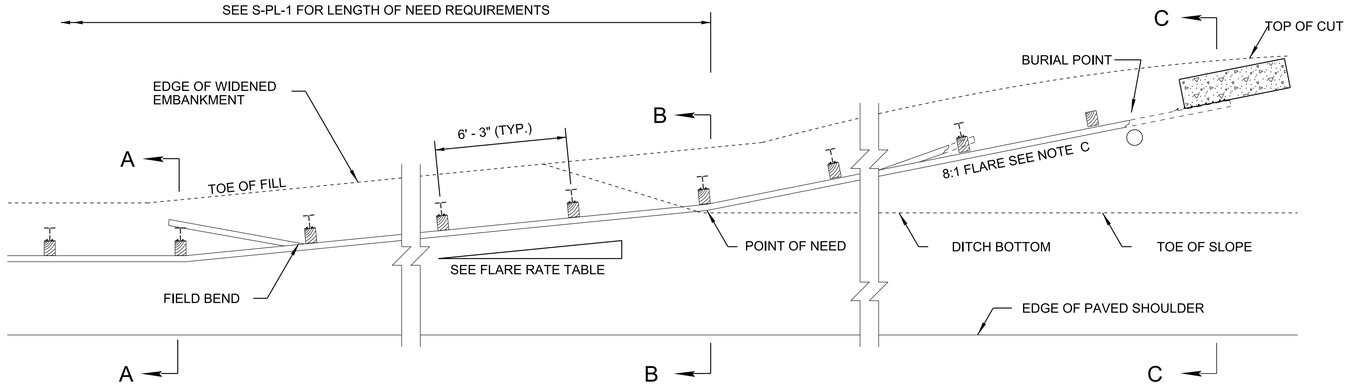

PLAN VIEW

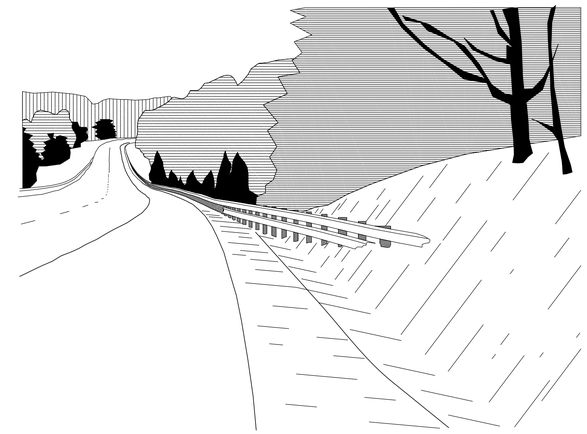

PERSPECTIVE VIEW

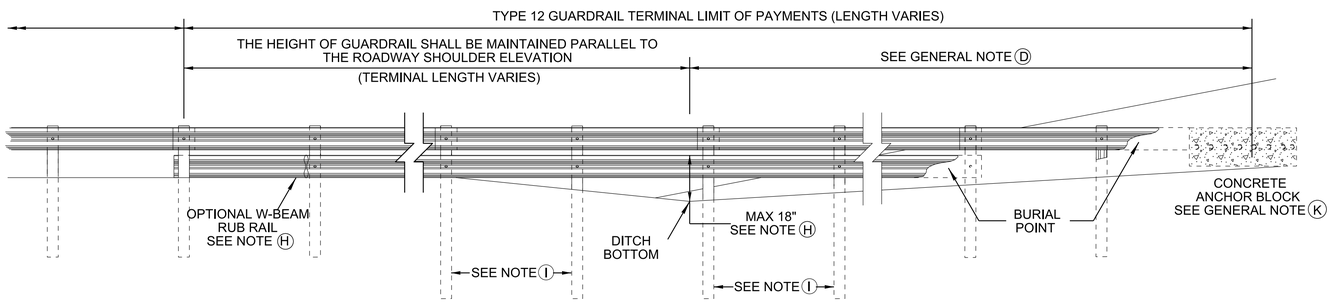

ELEVATION VIEW
(ALONG GUARDRAIL)

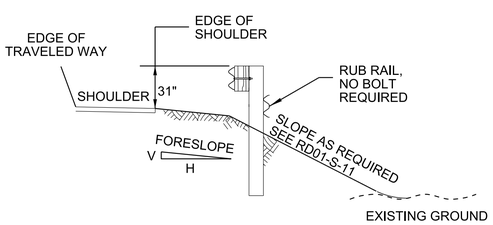

SECTION A-A

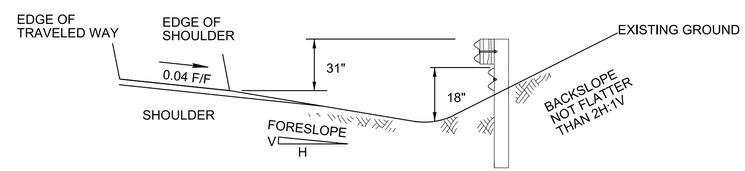

SECTION B-B

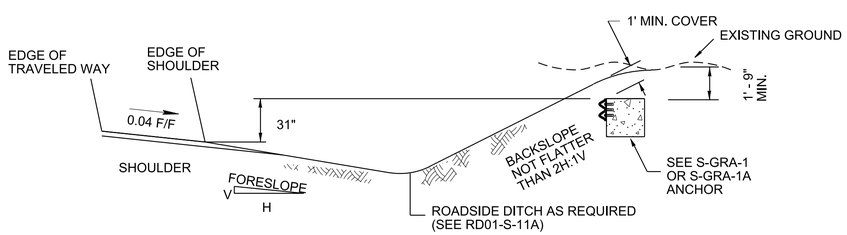

SECTION C-C

FLARE RATE TABLE

RATE	POSTED SPEED (mph)
15:1	70
14:1	60
11:1	50
8:1	40
7:1	30

NOTE TO DESIGNER

DO NOT USE WITHOUT REFERENCING S-GRA-1 OR S-GRA-1A

GENERAL NOTES

(A) THE TYPE 12 GUARDRAIL TERMINAL SHOULD BE USED ONLY WITH 2:1 OR STEEPER BACK SLOPE. IF BACK SLOPE IS FLATTER, THE FULL DESIGN LENGTH OF NEED OF THE BARRIER MUST BE PROVIDED.

(B) THE FILL SLOPE MUST NOT BE ALLOWED TO SPILL UNDER THE RAIL THROUGHOUT THE LENGTH OF NEED BECAUSE THIS EFFECTIVELY DECREASES THE RAIL HEIGHT AND ALLOWS VEHICLE OVERRIDE RATHER THAN CONTAINMENT AND REDIRECTION.

(C) THE FLARE RATE OF THE GUARDRAIL MAY BE STEEPENED TO 8:1 AFTER CROSSING THE DITCH BOTTOM TO SHORTEN THE LENGTH OF THE TERMINAL.

(D) IF MIN. 1' COVER OVER THE CONCRETE BLOCK CANNOT BE ACHIEVED, THE ELEVATION OF GUARDRAIL MAY BE LOWERED AT A 1:10 SLOPE RATE AFTER CROSSING THE DITCH BOTTOM.

(E) THE CONTRACTOR SHALL CONSTRUCT FORE SLOPES AS PART OF THE INITIAL GRADING OPERATIONS AS SHOWN ON THIS STANDARD DRAWING AFTER FIELD VERIFICATION OF HAZARD LOCATION AND ENGINEER'S APPROVAL.

(F) ONLY USE TYPE 38 OR TYPE 21 (WHERE APPROPRIATE) IF SUITABLE BACKSLOPE IS NOT AVAILABLE.

(G) THE DESIGNER SHALL INCORPORATE THE DETAILS SHOWN ON THIS DRAWING IN THE RIGHT-OF-WAY AND CONSTRUCTION PLANS AS WELL AS THE ROADWAY CROSS-SECTION SHEETS.

(H) ADD W-BEAM RUB RAIL WHENEVER THE CLEARANCE FROM THE BOTTOM OF THE W-BEAM TO THE GROUND LINE EXCEEDS 18 INCHES.

(I) FOR THE RUB RAIL SECTION USE 8' LONG POSTS.

(J) UNIT PRICE FOR ITEM NO. 705-04.02 GUARDRAIL TERMINAL (TYPE 12) PER EACH SHALL INCLUDE COSTS OF FURNISHING AND INSTALLING ALL COMPONENTS AS SHOWN.

(K) SEE S-GRA-1 FOR DETAILS OR S-GRA-1A ALTERNATE INSTALLATION.

MINOR REVISION -- FHWA APPROVAL NOT REQUIRED.

STATE OF TENNESSEE
DEPARTMENT OF TRANSPORTATION

TYPE 12 GUARDRAIL TERMINAL BURIED-IN-BACKSLOPE

7-11-13 | S-GRT-1

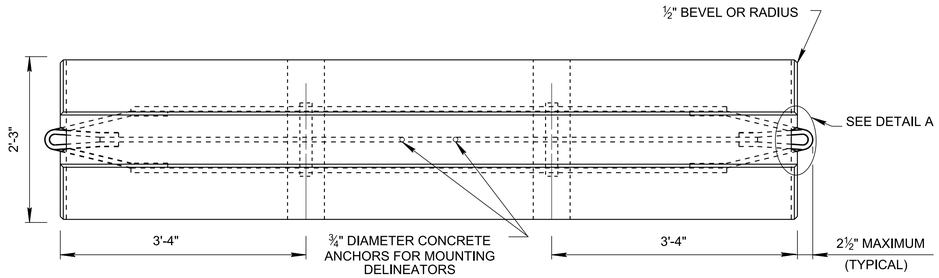

PLAN

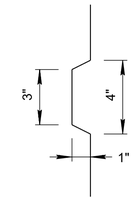

DETAIL 'A'

(TOP & BOTTOM CONNECTOR NOT SHOWN)

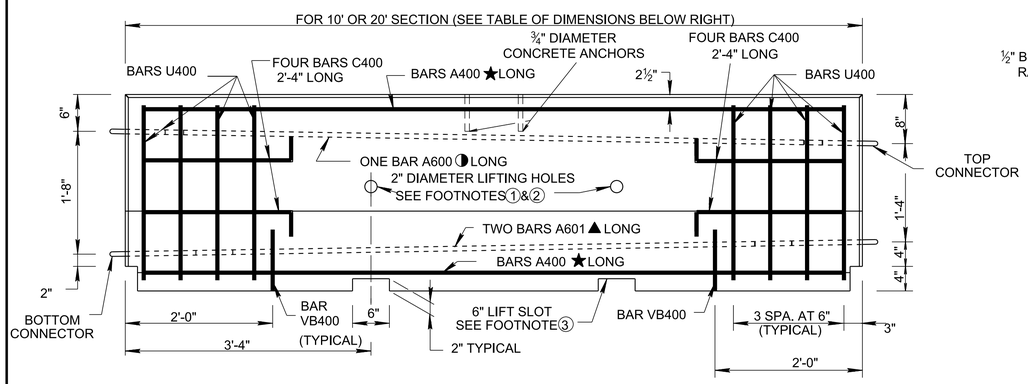

ELEVATION

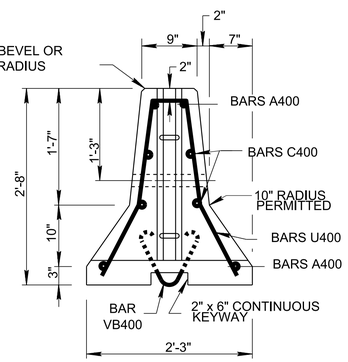

END ELEVATION

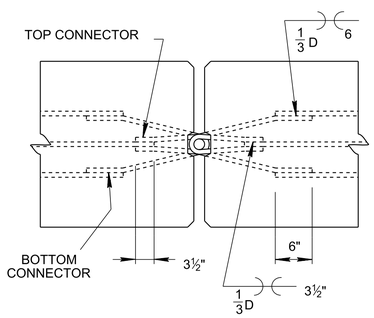

PLAN OF CONNECTION DETAIL

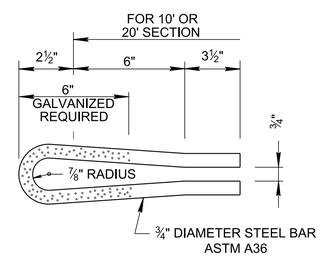

TOP CONNECTOR

(GALVANIZE AFTER FORMING)

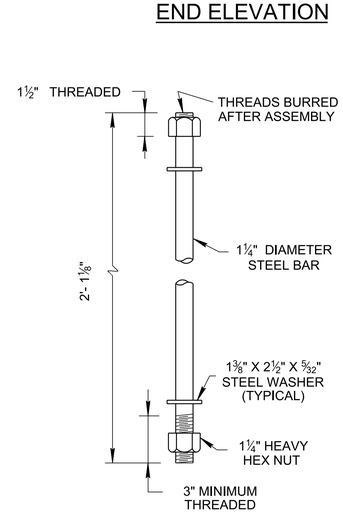

CONNECTOR PIN

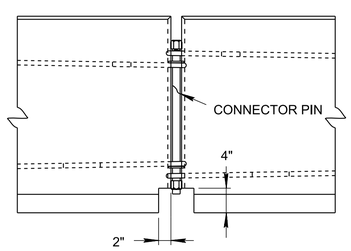

ELEVATION OF CONNECTION DETAIL

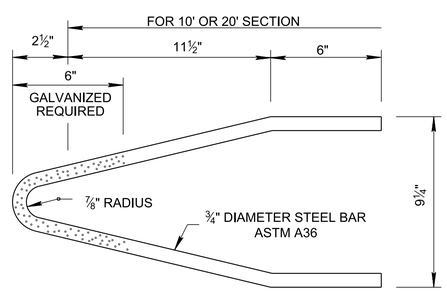

BOTTOM CONNECTOR

(GALVANIZE AFTER FORMING)

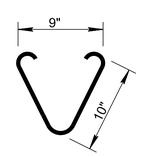

BAR VB400

(SEE GENERAL NOTE Ⓖ)

GENERAL NOTES

Ⓐ PRECAST CONCRETE BARRIER SHALL BE CONSTRUCTED WITH CLASS 'A' CONCRETE MANUFACTURED IN ACCORDANCE WITH SECTION 604 OF THE STANDARD SPECIFICATIONS.

Ⓑ REINFORCING STEEL: TO BE ASTM A615.

Ⓒ THE CONNECTOR PIN, 1¼" X 25⅛" THREADED ROD OR 1¼" X 25⅛" BOLT SHALL HAVE A MINIMUM OF 50,000 POUNDS TENSILE STRENGTH. THE HEAVY HEX NUTS AND THE TWO HEAVY FLAT WASHERS SHALL MEET ASTM A-325. THE CONNECTOR PIN, TOP CONNECTOR, BOTTOM CONNECTOR, NUTS AND WASHERS SHALL BE GALVANIZED IN ACCORDANCE WITH AASHTO M-111.

Ⓓ PLACE ALL STEEL REINFORCEMENT 2" MINIMUM FROM OUTSIDE FACE OF WALL, EXCEPT AS OTHERWISE SHOWN.

Ⓔ PAYMENT WILL BE MADE UNDER ITEM NO. 712-02.02, INTERCONNECTED PORTABLE BARRIER RAIL PER LINEAR FOOT.

Ⓕ ANY SALVABLE VALUE OF THE PORTABLE BARRIER RAIL WILL BECOME THE PROPERTY OF THE CONTRACTOR. THE PORTABLE BARRIER RAIL SHALL BE MOVED OFF THE PROJECT.

Ⓖ WHEN INTERCONNECTED PORTABLE BARRIER RAIL IS CONSTRUCTED IN THE UPRIGHT POSITION AS SHOWN ON THIS DRAWING THE VB400 BAR WILL BECOME OPTIONAL AND MAYBE OMITTED FROM THE INSTALLATION.

Ⓗ ALTERNATE PRECAST BARRIERS OF THE SAME EXACT CROSS-SECTION HAVING EQUIVALENT REINFORCEMENT, BUT EQUIPPED WITH OTHER FEDERALLY APPROVED, CRASH TESTED INTERCONNECTING HARDWARE MEETING TL-3 EVALUATION CRITERIA SPECIFIED IN NCHRP REPORT 350 MAY BE SUBMITTED TO THE DIVISION OF STRUCTURES FOR AN APPROVAL. IF APPROVED, THE ALTERNATE WILL BE ADDED TO THE TDOT APPROVED QUALIFIED PRODUCT LISTS FOR ACCEPTABLE PRODUCTS.

Ⓘ THE CONTRACTORS, IF THEY WISH TO USE AN ALTERNATE, SHOULD CONSULT THE TDOT APPROVED QUALIFIED PRODUCT LISTS FOR ALTERNATES TO THE INTERCONNECTED PORTABLE BARRIER RAIL SHOWN ON THIS STANDARD DRAWING. THE DIVISION OF MATERIALS AND TESTS SHOULD BE CONTACTED FOR THIS LIST.

Ⓙ DIFFERENT SECTION LENGTHS AND DIFFERENT APPROVED CONNECTIONS CAN BE USED ON A SPECIFIC PROJECT (REFER TO GENERAL NOTES H AND I ABOVE), ONLY ONE SECTION LENGTH AND CONNECTION TYPE SHALL BE USED IN A SINGLE RUN OF INTERCONNECTED PORTABLE BARRIER RAIL.

Ⓚ IT IS IMPORTANT TO PROVIDE MIN. 4' DEFLECTION ZONE BEHIND THE BARRIER RAIL.

Ⓛ A 3"X 4" DELINEATOR SHALL BE INSTALLED ON EACH BARRIER WALL. SEE STANDARD DRAWING T-PBR-2.

Ⓜ WHEN A 2' OFFSET BETWEEN THE TRAVELED WAY AND BARRIER IS NOT FEASIBLE, MOUNT A DELINEATOR AS SHOWN ON T-PBR-2 AT EVERY 50'.

Ⓝ INTERCONNECTED PORTABLE BARRIER RAIL TO BE PAID FOR UNDER ITEM NUMBER:

712-02.02 INTERCONNECTED PORTABLE BARRIER RAIL PER L.F.

Ⓞ ONLY PRODUCTS LISTED ON THE DEPARTMENT'S QPL SHALL BE USED.

LIFTING HOLE AND SLOT FOOTNOTES

① 2" DIAMETER LIFTING HOLE - 2 REQUIRED FOR EACH SECTION TO BE PLACED 3'-4" FROM EITHER END OF THE BARRIER WALL. ADDITIONAL HOLES MAY BE ADDED TO 20 FOOT SECTION LENGTHS, PLACEMENT OF ADDITIONAL HOLES TO BE AT THE DISCRETION OF THE FABRICATOR. FORMED WITH 2" PVC PIPE OR EQUAL.

② LIFTING BARS SHALL BE REQUIRED TO PREVENT SPALLING OF CONCRETE AROUND HOLES.

③ 6" LIFT SLOTS PROVIDES DRAINAGE FOR PAVEMENT DO NOT BLOCK THE OPENINGS.

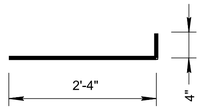

BAR C400

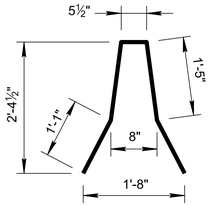

BAR U400

APPROXIMATE WEIGHT AND QUANTITIES

SECTION LENGTH FEET	WEIGHT POUND	REINFORCING STEEL POUND	CONCRETE (CUBIC YARD)
10	4,860	108	1.2
20	9,720	180	2.4

BILL OF STEEL

BAR	SIZE	NO. REQUIRED	LENGTH	
			10'	20'
A400	4	4	9'-6"	19'-6"
A600	6	1	9'-0"	19'-0"
A601	6	2	8'-1"	18'-1"
C400	4	8	2'-8"	2'-8"
U400	4	8	5'-6"	5'-6"
VB400	4	2	2'-1"	2'-1"

REV. 4-22-91: CHANGED GENERAL NOTE Ⓒ TO INCLUDE TOP CONNECTOR AND BOTTOM CONNECTOR UNDER GALVANIZING SPECIFICATION AASHTO M-111.

REV. 7-29-91: ADDED GENERAL NOTE Ⓖ.

☐ REV. 1-19-92: CHANGED DRAWING NUMBER FROM S-PR-1 TO T-PBR-1. ADDED ¾" DIAMETER CONCRETE ANCHORS. CHANGED FOOTNOTE ①. ADDED FOOTNOTE ③.

☐ REV. 1-19-96: CHANGED DIMENSION ON C400 BAR.

☐ REV. 5-27-99: ADDED GENERAL NOTES Ⓗ AND Ⓘ.

REV. 3-10-00: ADDED GENERAL NOTE Ⓙ.

☐ REV. 2-22-04: ADDED C400 BAR TO BILL OF STEEL TABLE.

☐ REV. 6-30-09: ADDED GENERAL NOTE Ⓚ AND CHANGED GENERAL NOTE Ⓗ, CHANGED SLOT FOOTNOTES ③ AND APPROXIMATE WEIGHT AND QUANTITIES

☐ REV. 3-16-17: ADDED GENERAL NOTES Ⓛ, Ⓜ, Ⓝ, Ⓞ AND ITEM NUMBERS. REVISED BILL OF STEEL. REPLACED VERTICAL PANELS WITH DELINEATORS.

☐ MINOR REVISION -- FHWA APPROVAL NOT REQUIRED.

STATE OF TENNESSEE
DEPARTMENT OF TRANSPORTATION

INTERCONNECTED PORTABLE BARRIER RAIL

2-28-91 | T-PBR-1

REV. 10-10-06: ADDED DETAIL FOR GROUND MOUNTED FLEXIBLE DELINEATOR AND GENERAL NOTES.

REV. 11-1-11: REVISED SHOULDER DETAILS.

REV. 3-16-17: ADDED DETAIL FOR SURFACE MOUNTED FLEXIBLE DELINEATOR. ADDED GENERAL NOTES. MODIFIED THE NAME OF THE DRAWING. CHANGED THE PAY ITEM NUMBERS. REPLACED VERTICAL PANELS WITH BARRIER MOUNTED FLEXIBLE DELINEATORS.

DELINEATOR MOUNTED ON INTERCONNECTED TEMPORARY PORTABLE CONCRETE BARRIER RAIL

(SEE S-PBR-1 FOR DETAILS REGRADING INTERCONNECTED PORTABLE BARRIER RAIL)

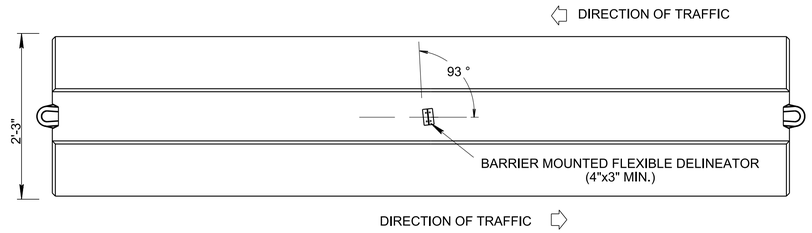

PLAN VIEW

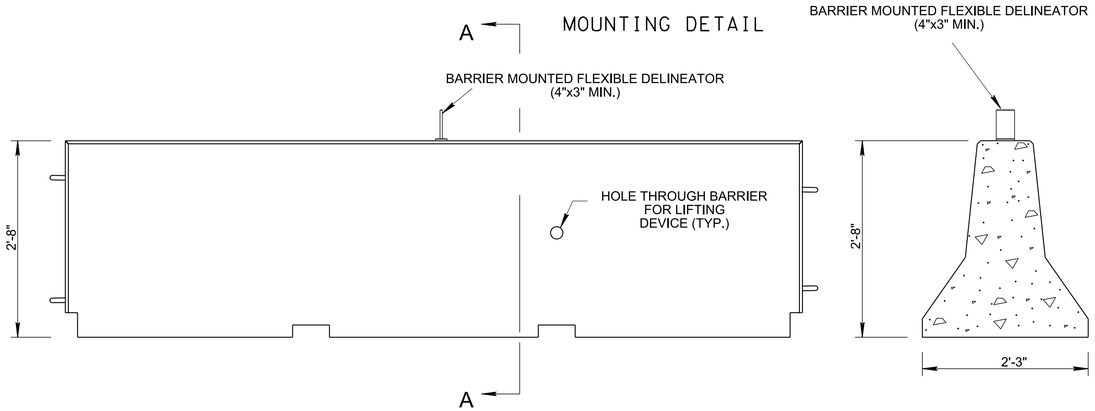

ELEVATION VIEW

SECTION A-A

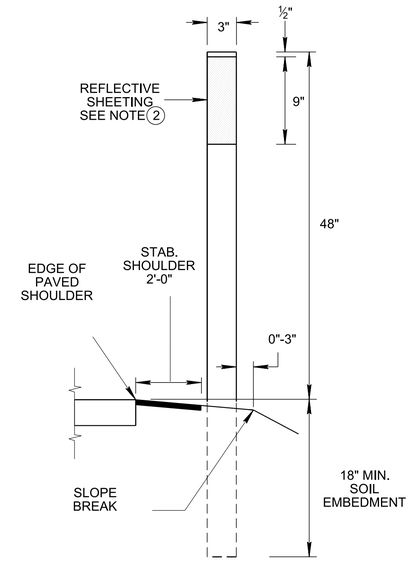

GROUND MOUNTED FLEXIBLE DELINEATOR

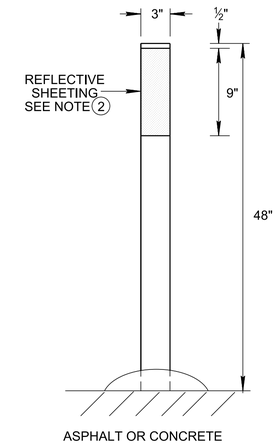

SURFACE MOUNTED FLEXIBLE DELINEATOR

BARRIER MOUNTED FLEXIBLE DELINEATOR GENERAL NOTES

(A) SPACING FOR DELINEATORS NOT IN A TAPER SHOULD BE A DISTANCE IN FEET APPROXIMATELY EQUAL TO TWO TIMES THE POSTED SPEED LIMIT IN MILES PER HOUR. THE MAXIMUM SPACING IN FEET BETWEEN DELINEATORS IN A TAPER SHOULD BE APPROXIMATELY EQUAL TO THE POSTED SPEED IN MILES PER HOUR, BUT WILL NOT EXCEED ONE HALF THE SPACING OF THE DELINEATORS NOT IN A TAPER.

(B) IF USED FOR TRAFFIC IN TWO DIRECTIONS, TWO SIDED DELINEATORS SHALL BE USED.

(C) THE BARRIER MOUNTED FLEXIBLE DELINEATORS FACE, SUPPORT, INSTALLATION AND HARDWARE ARE TO BE PAID FOR UNDER THE PRICE BID FOR

713-02.26 CONCRETE BARRIER/PARAPET DELINEATOR PER EACH
713-02.27 CONCRETE BARRIER/PARAPET DELINEATOR (BI-DIRECTIONAL) PER EACH

(D) BARRIER MOUNTED FLEXIBLE DELINEATORS SHALL BE 3" WIDTH MINIMUM X 4" HEIGHT MINIMUM.

(E) ONLY PRODUCTS LISTED ON THE DEPARTMENT'S QPL SHALL BE USED.

(F) BARRIER MOUNTED FLEXIBLE DELINEATORS SHALL BE INSTALLED PER MANUFACTURER'S INSTRUCTIONS.

GROUND MOUNTED AND SURFACE MOUNTED FLEXIBLE DELINEATOR GENERAL NOTES

(1) THE REFLECTIVE SHEETING SHALL MEET THE REQUIREMENTS OF AASHTO M268, TYPE III OR HIGHER RETROREFLECTION PERFORMANCE LEVEL.

(2) THE REFLECTIVE SHEETING STRIP ON THE DELINEATORS SHALL BE MIN. 9 INCHES IN LENGTH AND SUFFICIENT WIDTH TO PROVIDE A MIN. 3 INCHES WIDE PROFILE FACING APPROACHING TRAFFIC. THE VARIATIONS IN REFLECTIVE SHEETING DIMENSION SHOULD NOT EXCEED ± 10%.

(3) THE CONTRACTOR SHALL SELECT MATERIAL FROM THE DEPARTMENT'S QUALIFIED PRODUCTS LIST.

(4) THE COLOR OF THE DELINEATOR POST SHALL BE WHITE UNLESS OTHERWISE NOTED ON THE PLANS.

(5) THE COLOR OF THE REFLECTIVE SHEETING SHALL CONFORM TO THE COLOR OF EDGE LINES STIPULATED IN SUBSECTION 3B-6 (PAGE 3B-8 AND 3B-11) OF THE CURRENT EDITION OF THE MANUAL ON UNIFORM TRAFFIC CONTROL DEVICES.

(6) PAYMENT FOR GROUND MOUNTED FLEXIBLE DELINEATORS WILL BE MADE AS FOLLOWS:

ITEM NUMBER 713-02.30, FLEXIBLE TUBULAR DELINEATOR PER EACH.

(7) SPACING FOR FLEXIBLE DELINEATOR POSTS SHALL BE 20' OR LESS.

(8) SURFACE MOUNTED FLEXIBLE DELINEATORS SHALL BE INSTALLED PER MANUFACTURER'S INSTRUCTIONS.

MINOR REVISION -- FHWA APPROVAL NOT REQUIRED.

STATE OF TENNESSEE
DEPARTMENT OF
TRANSPORTATION

DETAILS FOR FLEXIBLE DELINEATORS

1-19-92 | T-PBR-2