REV. 11-06-14: EXTENDED GUARDRAIL TERMINAL PAY LIMITS.

REV. 4-23-15: REVISED TERMINAL RAIL ELEMENT DETAILS. ADDED ALTERNATE DETAIL.

REV. 10-10-16: UPDATED DETAILS TO MATCH UPDATED S-GRA-3.

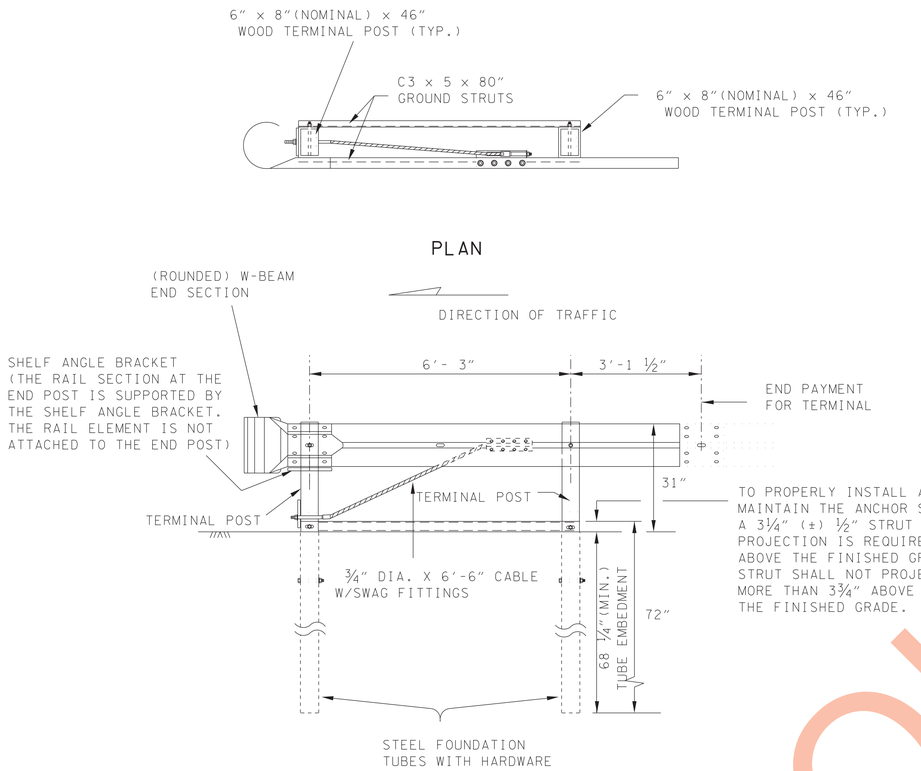

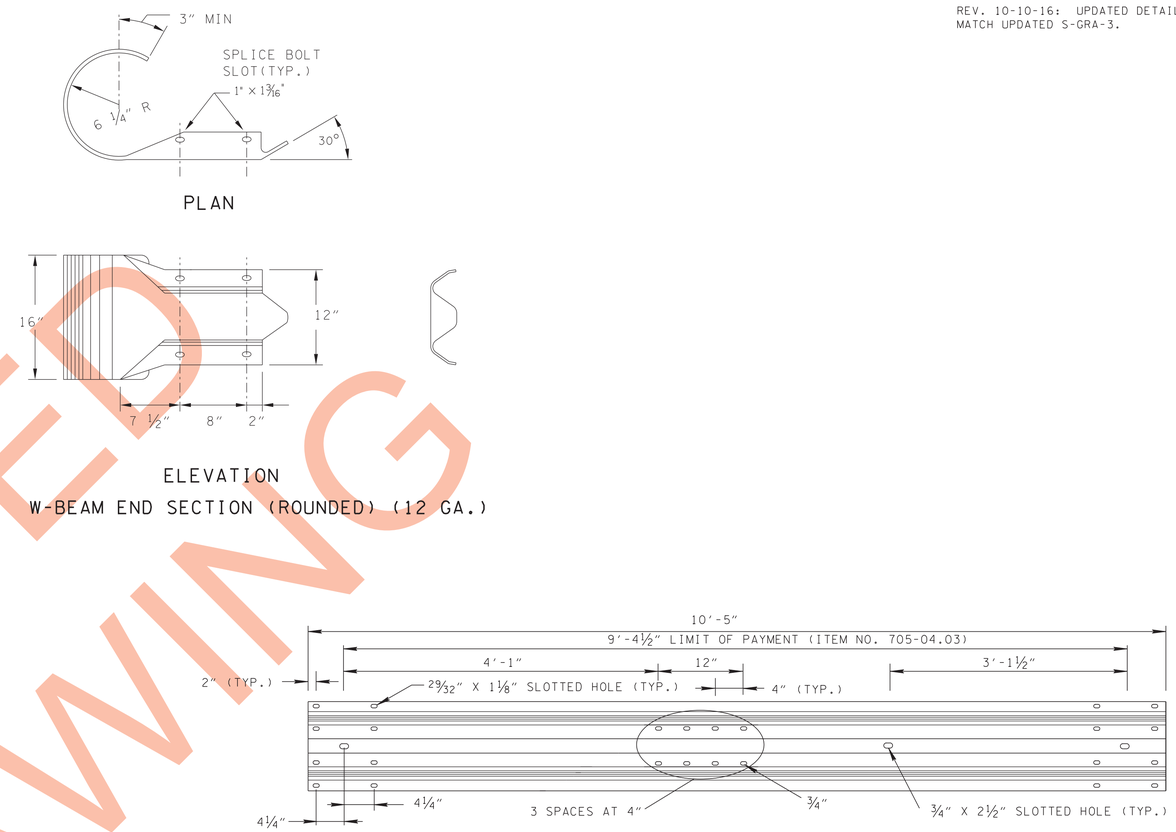

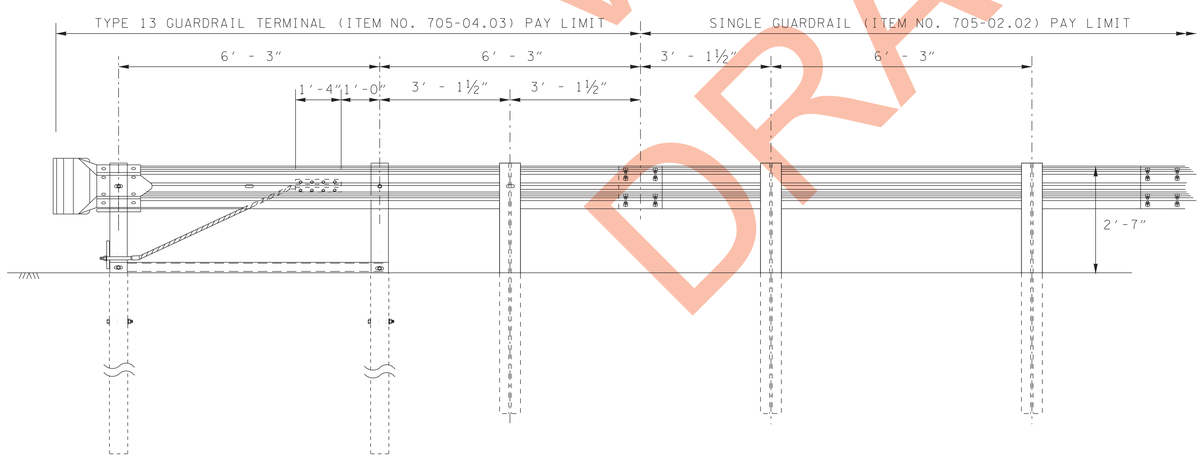

NOTE TO DESIGNER

DO NOT USE WITHOUT ALSO REFERENCING S-GRA-3

GENERAL NOTES

(A) THIS ANCHORAGE MAY ONLY BE USED ON THE TRAILING END OF A BARRIER WHICH IS NOT EXPOSED TO DIRECT VEHICULAR IMPACT OR OUTSIDE THE CLEAR ZONE (ONLY DIVIDED HIGHWAYS OR ROADS WITH ONE WAY TRAFFIC) USE S-PL-1 TO DETERMINE LENGTH OF NEED.

(B) GUARDRAIL SHALL MEET THE REQUIREMENTS OF AASHTO M 180, CLASS A, TYPE 1 UNLESS OTHERWISE DESIGNATED.

(C) PAY ITEM NO. 705-04.03 GUARDRAIL TERMINAL (TYPE13)

MINOR REVISION -- FHWA APPROVAL NOT REQUIRED.

STATE OF TENNESSEE
DEPARTMENT OF TRANSPORTATION

TYPE 13
GUARDRAIL
TERMINAL
(TRAILING END)

7-11-13 | S-GRT-4

VOIDED DRAWING

1/15/2016 9:44:09 AM
C:\Standard Drawings\DGN to PDF\S-GRT-4_101016.DGN