1 @ 16 x 13 REINFORCED CONCRETE BOX BRIDGE

Maximum Fill Height ft.	Dimensions ST in.	Dimensions SB in.	Dimensions WT in.	Dimensions BW ft.	Bars TST Size	Bars TST No.	Bars TST Spacing in.	Bars TST Length ft.	Bars TSB Size	Bars TSB No.	Bars TSB Spacing in.	Bars TSB Length ft.	Bars BST Size	Bars BST No.	Bars BST Spacing in.	Bars BST Length ft.	Bars BSB Size	Bars BSB No.	Bars BSB Spacing in.	Bars BSB Length ft.	Bars EWE Size	Bars EWE No.	Bars EWE Spacing in.	Bars EWE Length ft.	Bars EWI Size	Bars EWI No.	Bars EWI Spacing in.	Bars EWI Length ft.	Bars LNT No.	Bars LND No.	Bars WS No.	Concrete CY/LF	Reinf. Steel LB/LF
No Fill	11.5	11	8	17.33	4	1	12	16.83	9	2	6	16.83	9	2	6	17.83	4	1	12	17.83	4	2	12	13.00	7	4	6	13.00	106	32	4	1.88	540
3	14	14	9	17.50	4	1	12	17.00	8	2	6	17.00	8	2	6	18.00	4	1	12	18.00	4	2	12	13.00	7	4	6	13.00	106	32	4	2.28	492
5	14	14	9	17.50	4	1	12	17.00	8	2	6	17.00	9	2	6	18.00	4	1	12	18.00	4	2	12	13.00	8	4	6	13.00	122	0	4	2.28	528
10	15	15	10	17.67	4	1	12	17.17	9	2	6	17.17	9	2	6	18.17	4	1	12	18.17	4	2	12	13.00	8	4	6	13.00	122	0	4	2.48	555
20	19	19	13	18.17	4	1	12	17.67	10	2	6	17.67	10	2	6	18.67	4	1	12	18.67	4	2	12	13.00	8	4	6	13.00	126	0	4	3.23	631
30	26	27	16	18.67	4	1	12	18.17	9	2	6	18.17	9	2	6	19.17	4	1	12	19.17	4	2	12	13.00	8	4	6	13.00	126	0	4	4.42	573
40	32	33	18	19.00	4	1	12	18.50	9	2	6	18.50	9	2	6	19.50	4	1	12	19.50	4	2	12	13.00	8	4	6	13.00	130	0	4	5.36	580
50	37	38	20	19.33	4	1	12	18.83	10	2	6	18.83	10	2	6	19.83	4	1	12	19.83	4	2	12	13.00	7	4	6	13.00	130	0	4	6.20	622
60	41	42	22	19.67	4	1	12	19.17	10	2	6	19.17	10	2	6	20.17	4	1	12	20.17	4	2	12	13.00	7	4	6	13.00	130	0	4	6.93	629

1 @ 16 x 14 REINFORCED CONCRETE BOX BRIDGE

Maximum Fill Height ft.	Dimensions ST in.	Dimensions SB in.	Dimensions WT in.	Dimensions BW ft.	Bars TST Size	Bars TST No.	Bars TST Spacing in.	Bars TST Length ft.	Bars TSB Size	Bars TSB No.	Bars TSB Spacing in.	Bars TSB Length ft.	Bars BST Size	Bars BST No.	Bars BST Spacing in.	Bars BST Length ft.	Bars BSB Size	Bars BSB No.	Bars BSB Spacing in.	Bars BSB Length ft.	Bars EWE Size	Bars EWE No.	Bars EWE Spacing in.	Bars EWE Length ft.	Bars EWI Size	Bars EWI No.	Bars EWI Spacing in.	Bars EWI Length ft.	Bars LNT No.	Bars LND No.	Bars WS No.	Concrete CY/LF	Reinf. Steel LB/LF
No Fill	11.5	11	8	17.33	4	1	12	16.83	9	2	6	16.83	9	2	6	17.83	4	1	12	17.83	4	2	12	14.00	8	4	6	14.00	110	32	4	1.93	587
3	14	14	9	17.50	4	1	12	17.00	8	2	6	17.00	8	2	6	18.00	4	1	12	18.00	4	2	12	14.00	8	4	6	14.00	110	32	4	2.33	539
5	14	14	10	17.67	4	1	12	17.17	8	2	6	17.17	9	2	6	18.17	4	1	12	18.17	4	2	12	14.00	8	4	6	14.00	126	0	4	2.43	545
10	15	15	11	17.83	4	1	12	17.33	9	2	6	17.33	10	2	6	18.33	4	1	12	18.33	4	2	12	14.00	9	4	6	14.00	126	0	4	2.65	646
20	19	20	14	18.33	4	1	12	17.83	10	2	6	17.83	9	2	6	18.83	4	1	12	18.83	4	2	12	14.00	8	4	6	14.00	130	0	4	3.48	614
30	26	27	17	18.83	4	1	12	18.33	9	2	6	18.33	9	2	6	19.33	4	1	12	19.33	4	2	12	14.00	8	4	6	14.00	130	0	4	4.63	590
40	32	33	20	19.33	4	1	12	18.83	9	2	6	18.83	9	2	6	19.83	4	1	12	19.83	4	2	12	14.00	8	4	6	14.00	134	0	4	5.71	600
50	37	38	22	19.67	4	1	12	19.17	10	2	6	19.17	10	2	6	20.17	4	1	12	20.17	4	2	12	14.00	8	4	6	14.00	134	0	4	6.57	676
60	41	43	24	20.00	4	1	12	19.50	10	2	6	19.50	10	2	6	20.50	4	1	12	20.50	4	2	12	14.00	8	4	6	14.00	138	0	4	7.39	685

1 @ 16 x 15 REINFORCED CONCRETE BOX BRIDGE

Maximum Fill Height ft.	Dimensions ST in.	Dimensions SB in.	Dimensions WT in.	Dimensions BW ft.	Bars TST Size	Bars TST No.	Bars TST Spacing in.	Bars TST Length ft.	Bars TSB Size	Bars TSB No.	Bars TSB Spacing in.	Bars TSB Length ft.	Bars BST Size	Bars BST No.	Bars BST Spacing in.	Bars BST Length ft.	Bars BSB Size	Bars BSB No.	Bars BSB Spacing in.	Bars BSB Length ft.	Bars EWE Size	Bars EWE No.	Bars EWE Spacing in.	Bars EWE Length ft.	Bars EWI Size	Bars EWI No.	Bars EWI Spacing in.	Bars EWI Length ft.	Bars LNT No.	Bars LND No.	Bars WS No.	Concrete CY/LF	Reinf. Steel LB/LF
No Fill	11.5	11	9	17.50	4	1	12	17.00	9	2	6	17.00	9	2	6	18.00	4	1	12	18.00	4	2	12	15.00	8	4	6	15.00	114	32	4	2.08	605
3	14	14	10	17.67	4	1	12	17.17	8	2	6	17.17	8	2	6	18.17	4	1	12	18.17	4	2	12	15.00	8	4	6	15.00	114	32	4	2.50	555
5	14	14	10	17.67	4	1	12	17.17	8	2	6	17.17	9	2	6	18.17	4	1	12	18.17	4	2	12	15.00	9	4	6	15.00	130	0	4	2.50	603
10	15	15	12	18.00	4	1	12	17.50	9	2	6	17.50	10	2	6	18.50	4	1	12	18.50	4	2	12	15.00	9	4	6	15.00	134	0	4	2.82	669
20	19	20	15	18.50	4	1	12	18.00	10	2	6	18.00	9	2	6	19.00	4	1	12	19.00	4	2	12	15.00	9	4	6	15.00	134	0	4	3.68	676
30	26	28	18	19.00	4	1	12	18.50	9	2	6	18.50	9	2	6	19.50	4	1	12	19.50	4	2	12	15.00	8	4	6	15.00	138	0	4	4.92	610
40	32	34	21	19.50	4	1	12	19.00	9	2	6	19.00	9	2	6	20.00	4	1	12	20.00	4	2	12	15.00	8	4	6	15.00	138	0	4	6.02	617
50	37	39	24	20.00	4	1	12	19.50	10	2	6	19.50	10	2	6	20.50	4	1	12	20.50	4	2	12	15.00	8	4	6	15.00	142	0	4	7.03	699
60	41	43	26	20.33	4	1	12	19.83	10	2	6	19.83	10	2	6	20.83	4	1	12	20.83	4	2	12	15.00	8	4	6	15.00	142	0	4	7.81	706

1 @ 16 x 16 REINFORCED CONCRETE BOX BRIDGE

Maximum Fill Height ft.	Dimensions ST in.	Dimensions SB in.	Dimensions WT in.	Dimensions BW ft.	Bars TST Size	Bars TST No.	Bars TST Spacing in.	Bars TST Length ft.	Bars TSB Size	Bars TSB No.	Bars TSB Spacing in.	Bars TSB Length ft.	Bars BST Size	Bars BST No.	Bars BST Spacing in.	Bars BST Length ft.	Bars BSB Size	Bars BSB No.	Bars BSB Spacing in.	Bars BSB Length ft.	Bars EWE Size	Bars EWE No.	Bars EWE Spacing in.	Bars EWE Length ft.	Bars EWI Size	Bars EWI No.	Bars EWI Spacing in.	Bars EWI Length ft.	Bars LNT No.	Bars LND No.	Bars WS No.	Concrete CY/LF	Reinf. Steel LB/LF
No Fill	11.5	11	10	17.67	4	1	12	17.17	9	2	6	17.17	9	2	6	18.17	4	1	12	18.17	4	2	12	16.00	8	4	6	16.00	118	32	4	2.25	622
3	14	14	10	17.67	4	1	12	17.17	8	2	6	17.17	8	2	6	18.17	4	1	12	18.17	4	2	12	16.00	9	4	6	16.00	118	32	4	2.56	617
5	14	14	11	17.83	4	1	12	17.33	8	2	6	17.33	9	2	6	18.33	4	1	12	18.33	4	2	12	16.00	9	4	6	16.00	134	0	4	2.67	623
10	15	15	13	18.17	4	1	12	17.67	9	2	6	17.67	10	2	6	18.67	4	1	12	18.67	4	2	12	16.00	9	4	6	16.00	138	0	4	3.01	690
20	19	20	16	18.67	4	1	12	18.17	10	2	6	18.17	10	2	6	19.17	4	1	12	19.17	4	2	12	16.00	9	4	6	16.00	138	0	4	3.89	731
30	26	28	20	19.33	4	1	12	18.83	9	2	6	18.83	9	2	6	19.83	4	1	12	19.83	4	2	12	16.00	8	4	6	16.00	142	0	4	5.28	629
40	32	34	23	19.83	4	1	12	19.33	9	2	6	19.33	9	2	6	20.33	4	1	12	20.33	4	2	12	16.00	8	4	6	16.00	142	0	4	6.42	637
50	37	39	25	20.17	4	1	12	19.67	10	2	6	19.67	10	2	6	20.67	4	1	12	20.67	4	2	12	16.00	8	4	6	16.00	146	0	4	7.32	717
60	41	43	28	20.67	4	1	12	20.17	10	2	6	20.17	10	2	6	21.17	4	1	12	21.17	4	2	12	16.00	8	4	6	16.00	146	0	4	8.26	727

Note: Maximum fill height shown in the table is measured from the bottom of the top slab. To obtain the total fill height from the flow line, add the height of the box.
Note: When height of fill above the top slab is less than 1 foot, the top mat of reinforcing in the top slab shall be constructed with 2-1/2 inches of concrete cover.

The following bar information applies to all fill cases in the tables above:
Bars LNT Size = 4 Spacing = 12 in.
Bars LND Size = 5 Spacing = 6 in.
Bars WS Size = 8 Length = 5.00 ft. Spacing = 12 in.

CONST. NO. ______

PROJECT NO.	YEAR	SHEET NO.
	2010	

REVISIONS

NO.	DATE	BY	BRIEF DESCRIPTION

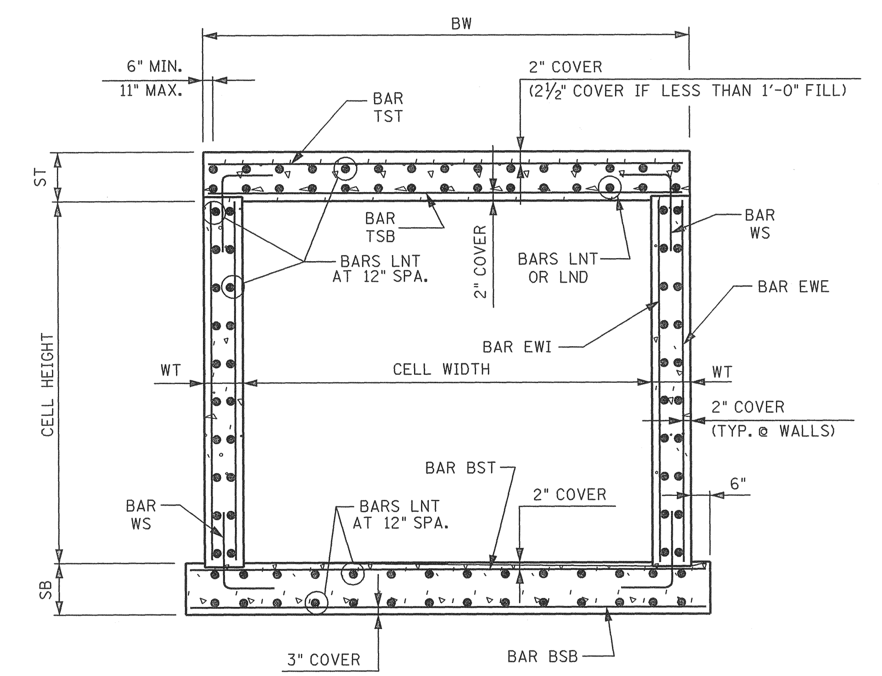

TYPICAL SECTION

NOTE: FOR DESCRIPTIONS OF BOX DIMENSIONS AND REINFORCING BAR DESIGNATIONS SEE STANDARD DRAWING NO. STD-17-5.

STATE OF TENNESSEE
DEPARTMENT OF TRANSPORTATION
STANDARD REINFORCED CONCRETE BOX BRIDGE
INTERIOR SECTION
SPANS: 1 BARREL AT 16'-0"
CLEAR HEIGHTS 13'-0" THRU 16'-0"
0' THRU 60' FILL
2010

DESIGNED BY RLL/ALP DATE 12-09
DRAWN BY KEVIN MARTINKO DATE 1-10
SUPERVISED BY EPW/RLC DATE 12-09
CHECKED BY RLL/ALP DATE 2-10

CORRECT Edward P. Wasserman
ENGINEER OF STRUCTURES