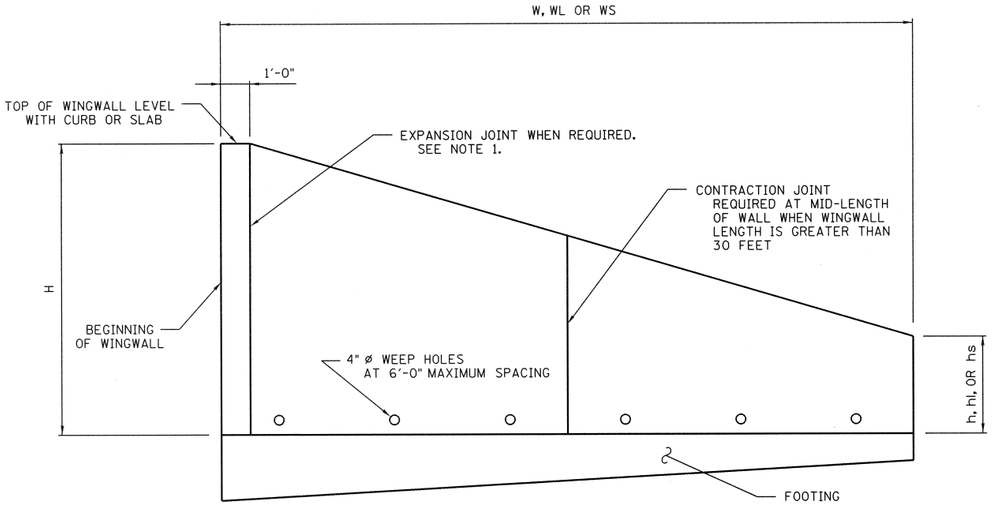

NOTE: SEE TABLES ON STANDARD DRAWINGS STD-17-11 THRU 14 FOR WINGWALL DIMENSIONS

W = WINGWALL LENGTH FOR 90° SKEW
WL = LENGTH OF LONG WINGWALL FOR SKEWS OTHER THAN 90°
WS = LENGTH OF SHORT WINGWALL FOR SKEWS OTHER THAN 90°
H = HEIGHT AT BEGINNING OF WINGWALL
h = MIN. HEIGHT OF END OF WINGWALL FOR 90° SKEW
hl = MIN. HEIGHT OF END OF LONG WINGWALL FOR SKEWS OTHER THAN 90°
hs = MIN. HEIGHT OF END OF SHORT WINGWALL FOR SKEWS OTHER THAN 90°

ELEVATION VIEW OF WINGWALL

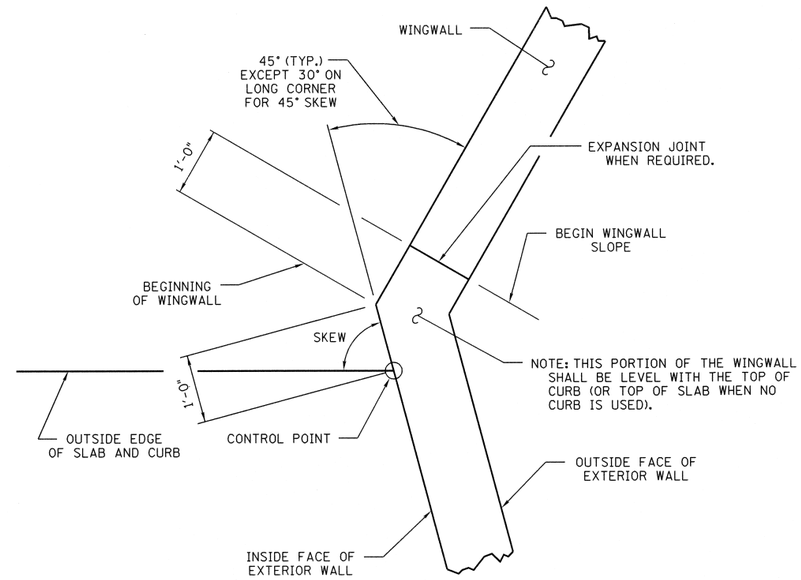

TYPICAL CORNER DETAIL

CONST. NO. _____

PROJECT NO.	YEAR	SHEET NO.
	2010	

REVISIONS

NO.	DATE	BY	BRIEF DESCRIPTION

NOTES

1. WALL JOINTS - AN EXPANSION JOINT IS REQUIRED AT THE LOCATION SHOWN ON THIS DRAWING FOR ALL BOX BRIDGES, AND FOR SLAB BRIDGES WHENEVER THE WINGWALL LENGTH IS GREATER THAN 15 FEET. FOR WINGWALLS GREATER THAN 30 FEET, PLACE A CONTRACTION JOINT AT MID-LENGTH OF THE WALL.
   IF RUSTICATION GROOVES ARE USED, THE JOINTS SHALL BE SPACED TO CORRESPOND WITH RUSTICATIONS. WATERSTOPS SHALL MEET THE REQUIREMENTS OF SPECIFICATION ARTICLES 604.26 AND 918.11. JOINT MATERIAL SHALL MEET THE REQUIREMENTS OF SPECIFICATIONS SECTION 905. FOOTING AND FOOTING REINFORCEMENT SHALL BE CONTINUOUS.

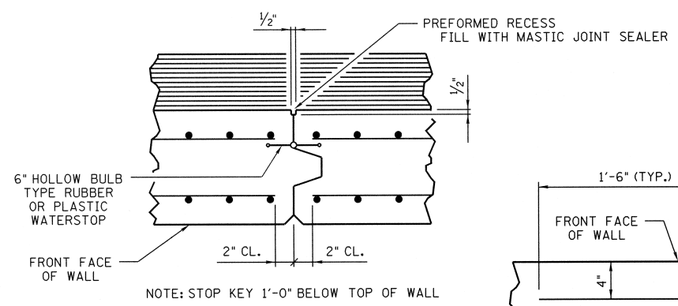

NOTE: STOP KEY 1'-0" BELOW TOP OF WALL

CONTRACTION JOINT

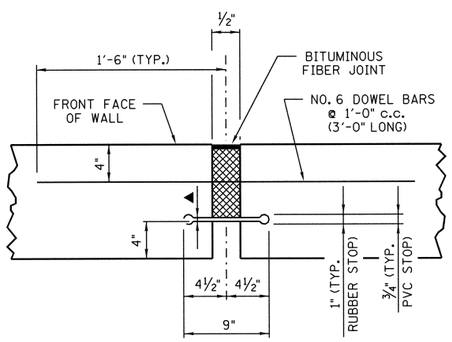

▲ DENOTES ⅜" THICKNESS FOR 9" HOLLOW BULB TYPE RUBBER OR PLASTIC WATERSTOP

EXPANSION JOINT DETAIL

THE EXPANSION JOINT SHALL BE USED IN THE WALL ONLY AND NOT CARRIED THROUGH THE FOOTING. NO REINFORCEMENT SHALL PASS THROUGH THE JOINT. ONE END OF THE DOWELS SHALL BE WRAPPED IN A LAYER OF TARPAPER WITH A TARPAPER CAP OVER THE END. THE COST OF THE BITUMINOUS FIBER AND DOWEL SHALL BE INCLUDED IN THE UNIT PRICE BID FOR CLASS A CONCRETE.

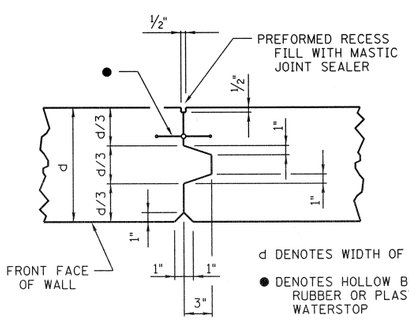

d DENOTES WIDTH OF WINGWALL

● DENOTES HOLLOW BULB TYPE RUBBER OR PLASTIC WATERSTOP

TYPICAL KEY DETAIL

WALL JOINT DETAILS

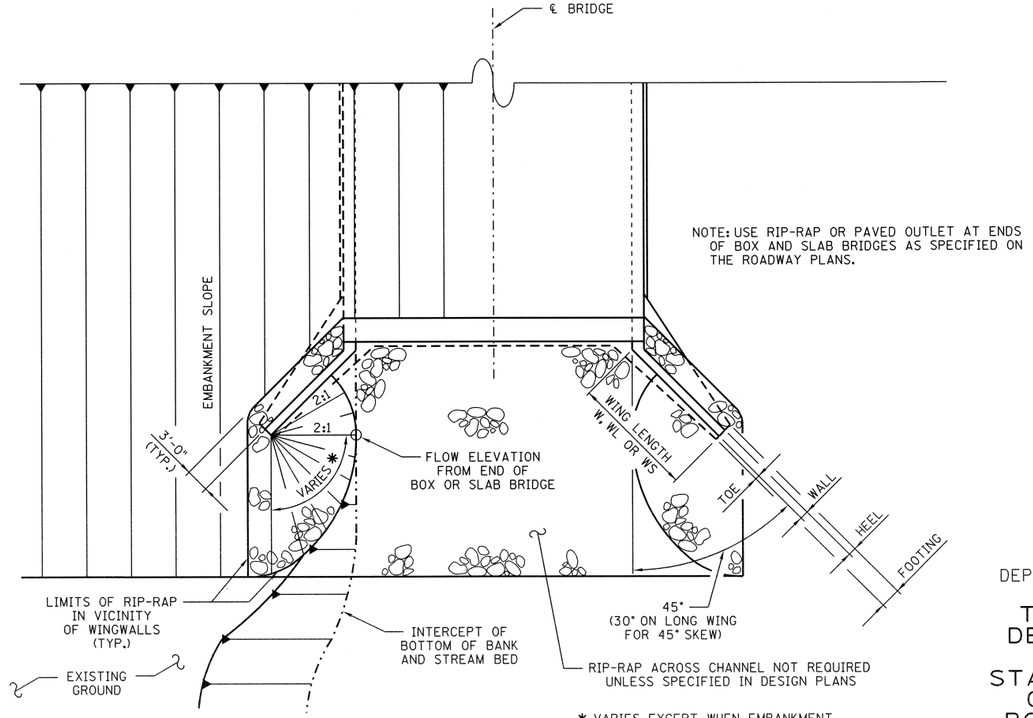

NOTE: USE RIP-RAP OR PAVED OUTLET AT ENDS OF BOX AND SLAB BRIDGES AS SPECIFIED ON THE ROADWAY PLANS.

✱ VARIES EXCEPT WHEN EMBANKMENT SLOPE IS 2:1

PLAN VIEW OF WINGWALLS

(90° SKEW SHOWN; OTHER SKEWS SIMILAR)

STATE OF TENNESSEE
DEPARTMENT OF TRANSPORTATION

TYPICAL WINGWALL DETAILS AND NOTES

STANDARD REINFORCED CONCRETE BRIDGE BOX AND SLAB TYPE

2010

CORRECT Edward P. Wasserman
ENGINEER OF STRUCTURES

DESIGNED BY	CMH / MAH	DATE	12-09
DRAWN BY	DIANE BUSH	DATE	04-10
SUPERVISED BY	RLH / JWP / MAH	DATE	12-09
CHECKED BY		DATE	

D:\dgn\2010\std173.dgn
04-06-2010
14:47

STD-17-10