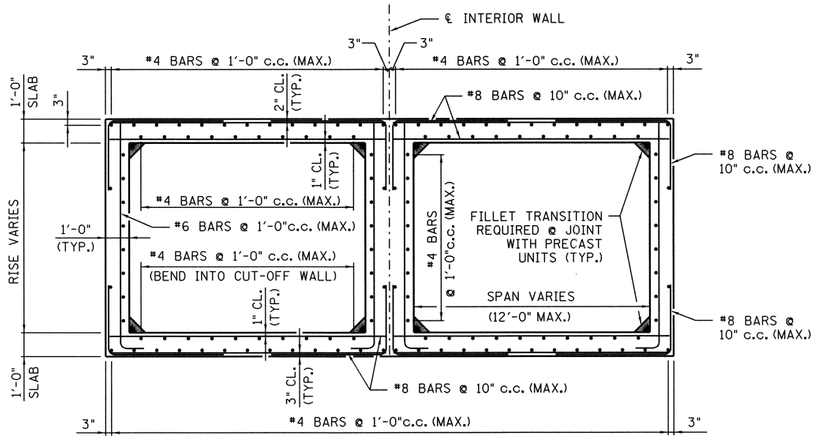

SECTION A - A

(SHOWING RECOMMENDED INSTALLATION OF MULTI-CELL LOCATIONS
SINGLE CELL INSTALLATION TO BE SIMILAR.)

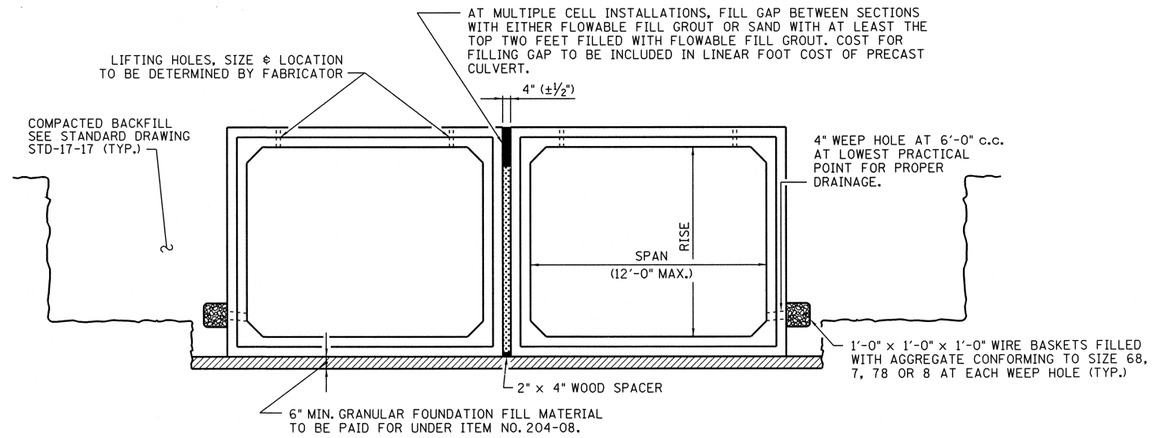

TYPICAL SECTION

(SHOWING RECOMMENDED INSTALLATION OF MULTI-CELL LOCATIONS.
SINGLE CELL INSTALLATION TO BE SIMILAR.)
FOR ADDITIONAL BOX CULVERT BACKFILL DETAILS SEE STANDARD DRAWINGS STD-17-17 & 18.

CONST. NO.		
PROJECT NO.	YEAR	SHEET NO.
	2010	

REVISIONS

NO.	DATE	BY	BRIEF DESCRIPTION

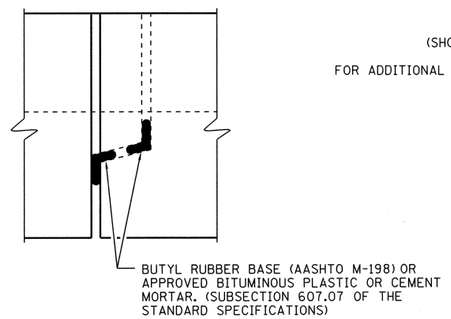

TYPICAL JOINT DETAIL

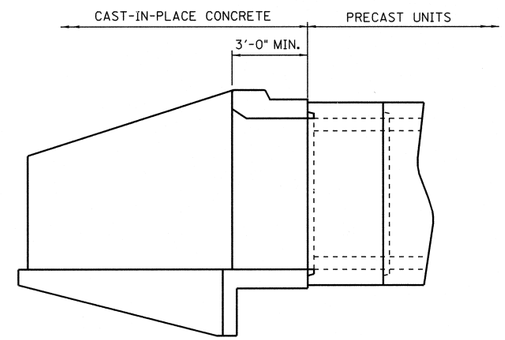

SECTION B - B

GENERAL NOTES

SPECIFICATIONS: "TDOT STANDARD SPECIFICATIONS FOR ROAD AND BRIDGE CONSTRUCTION" OF THE TENNESSEE DEPARTMENT OF TRANSPORTATION (MARCH 1, 2006) AND SUPPLEMENTAL SPECIFICATIONS.
LOADING: HL-93 LIVE LOADING
DESIGN SPECIFICATIONS: "AASHTO LRFD BRIDGE DESIGN SPECIFICATIONS" 4TH EDITION (2007) WITH 2009 INTERIMS.
PRECAST UNITS SHALL BE LAID AND JOINED AS SPECIFIED IN SECTION 607.06 AND 607.07 OF THE TENNESSEE SPECIFICATIONS.
END SECTIONS FOR PRECAST UNITS SHALL BE CAST-IN-PLACE IN ACCORDANCE WITH PLANS DETAILS AND THE TENNESSEE STANDARD ROAD AND BRIDGE SPECIFICATIONS. COST TO BE INCLUDED IN LINEAR FOOT COST OF PRECAST CULVERT.
ALL PRECAST REINFORCED CONCRETE BOX CULVERTS SHALL CONFORM TO THE LATEST EDITION OF ASTM C1577. DETAILS NOT CONFORMING TO THESE STANDARDS SHALL BE SUBMITTED FOR APPROVAL ALONG WITH DESIGN CALCULATIONS USING "BOXCAR" OR OTHER APPROVED DESIGN PROGRAM. THE DESIGNS SHALL BE PREPARED AND STAMPED BY A PROFESSIONAL ENGINEER LICENSED IN TENNESSEE.
JOINTS FOR PRECAST SECTIONS SHALL BE TONGUE AND GROOVE TYPE AND SHALL BE SEALED WITH MASTIC OR SAND/CEMENT GROUT.
LIFTING HOLES SHALL BE FILLED WITH CONCRETE PLUGS AND MASTIC AFTER THE BOX SECTIONS ARE IN PLACE.
WINGWALLS SHALL BE CONSTRUCTED IN ACCORDANCE WITH THE CONTRACT PLANS. CURBS SHALL BE CONSTRUCTED IN ACCORDANCE WITH STANDARD DRAWING NO. D-CE-3. FOR FILL HEIGHTS GREATER THAN 18 INCHES, USE THE 1'-9" CURB WIDTH SHOWN ON THIS PAGE.
A REINFORCING STEEL SCHEDULE AND PLAN OF PRECAST SECTION LOCATIONS SHALL BE PREPARED BY THE CONTRACTOR AND SUBMITTED TO THE ENGINEER FOR APPROVAL.

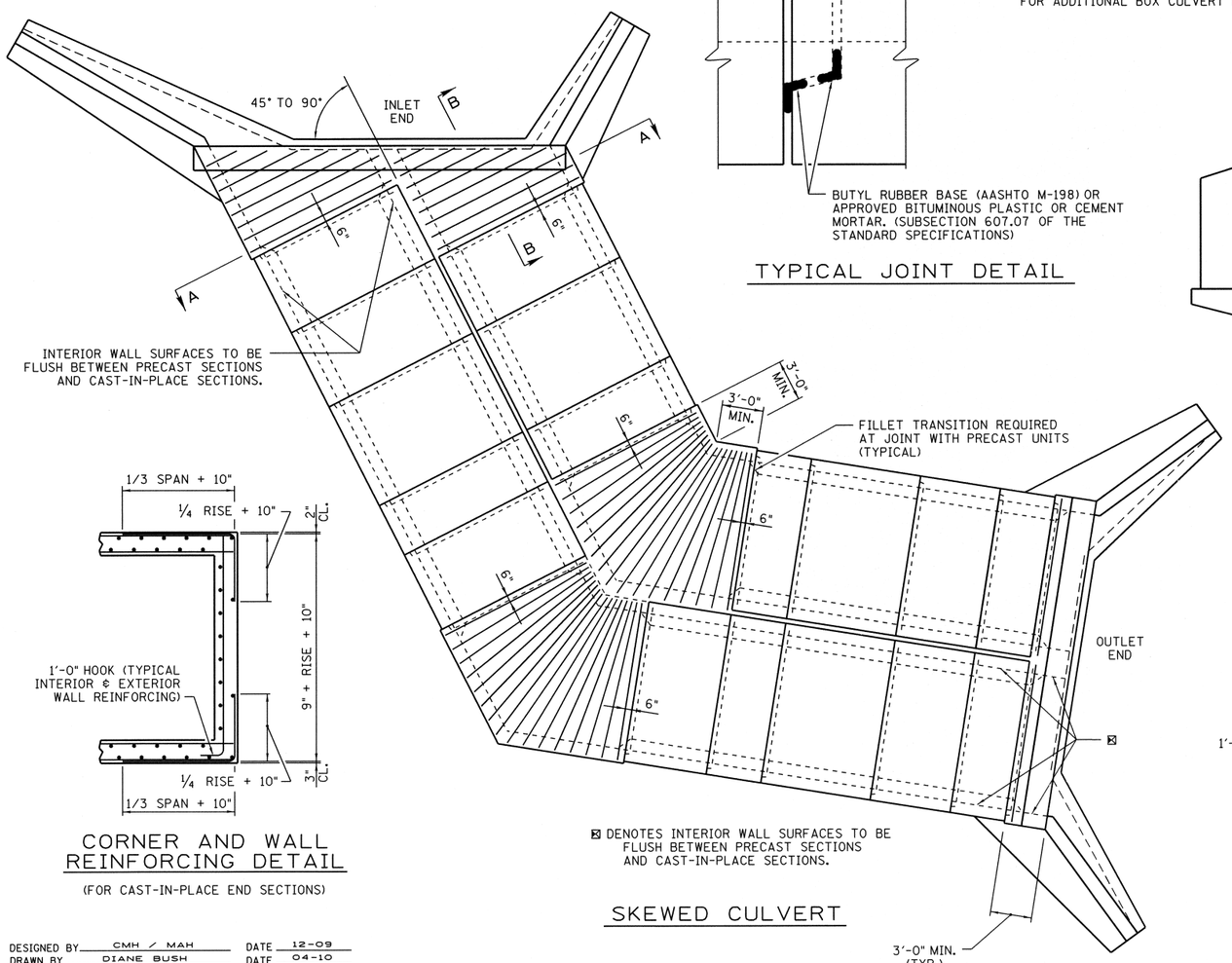

SKEWED CULVERT

CORNER AND WALL REINFORCING DETAIL

(FOR CAST-IN-PLACE END SECTIONS)

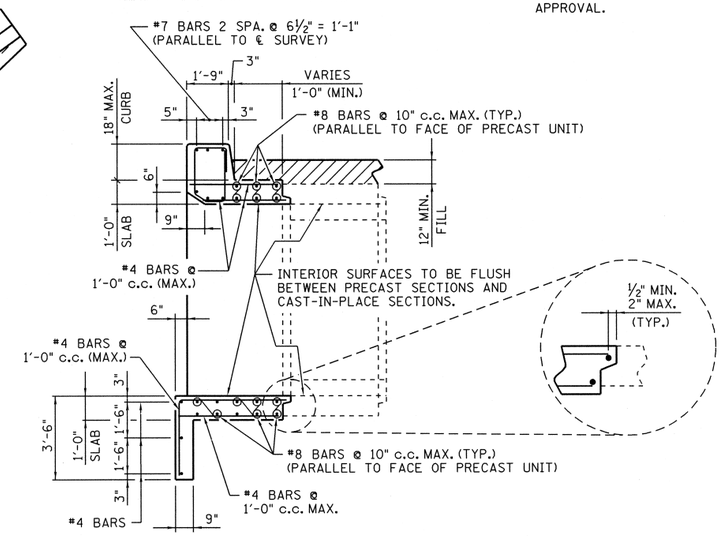

CAST-IN-PLACE END SECTION

(INLET SHOWN, OUTLET SIMILAR)

STATE OF TENNESSEE
DEPARTMENT OF TRANSPORTATION

PRECAST BOX CULVERT DETAILS

STANDARD REINFORCED CONCRETE BRIDGE BOX TYPE

2010

CORRECT Edward P. Wasserman
ENGINEER OF STRUCTURES

DESIGNED BY	CMH / MAH	DATE	12-09
DRAWN BY	DIANE BUSH	DATE	04-10
SUPERVISED BY	RLH / JWP / MAH	DATE	12-09
CHECKED BY		DATE	

D:\dgn\stt\std177.dgn
21-OCT-2010
13:26

STD-17-29