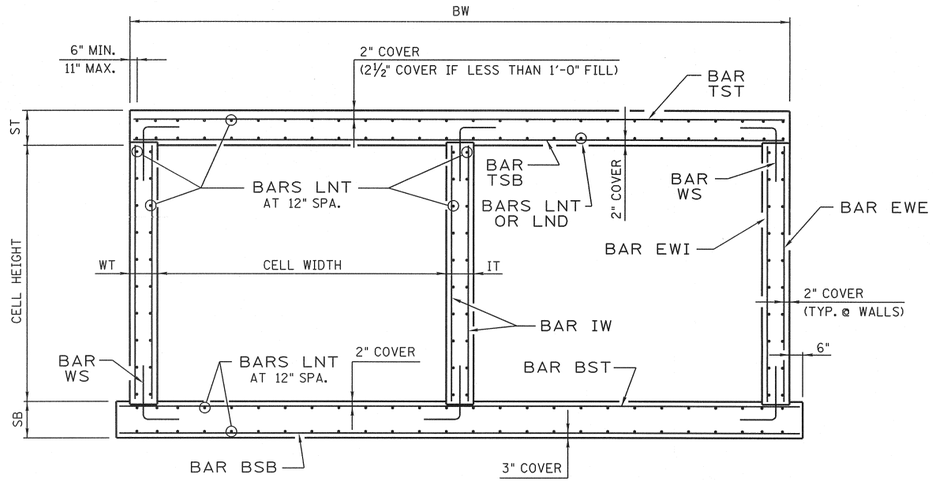


BOX BRIDGE

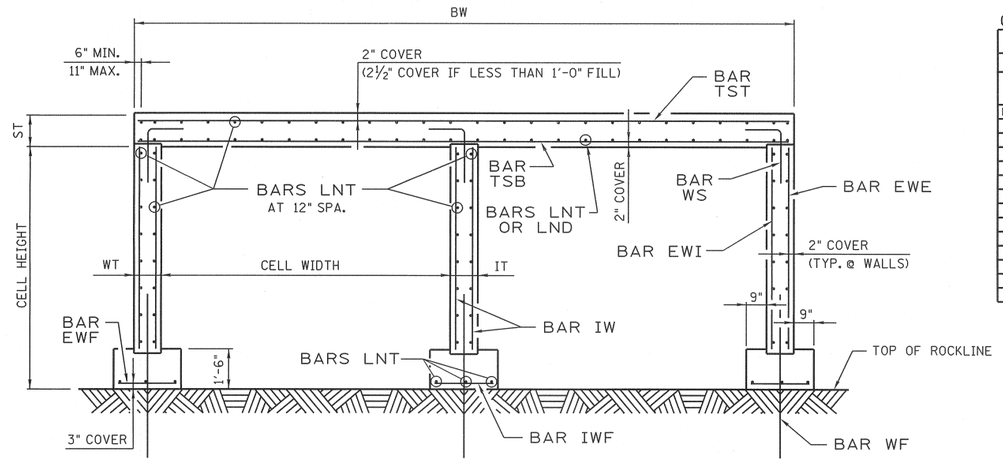


SLAB BRIDGE

## TYPICAL SECTIONS

NOTE: TWO BARREL TYPICAL SECTIONS SHOWN. SINGLE BARREL AND THREE BARREL ARE SIMILAR.

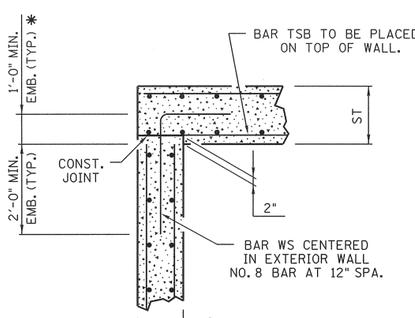


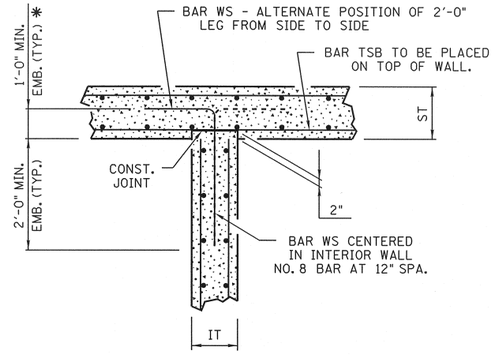


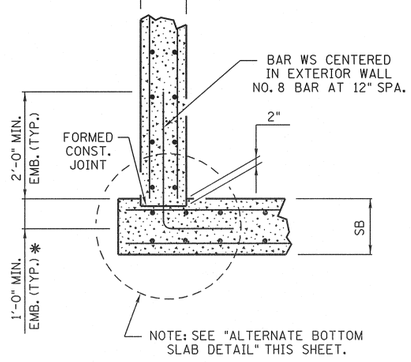


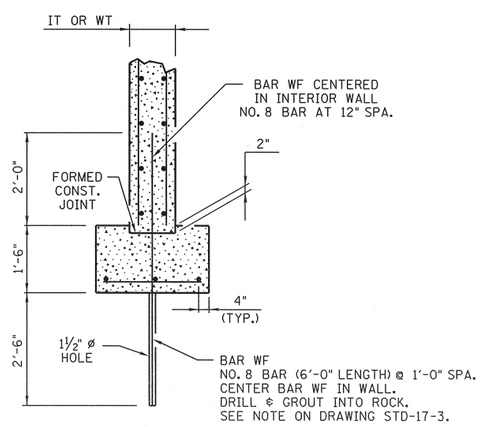


## JOINT DETAIL FOR WALL TO SLAB OR FOOTING

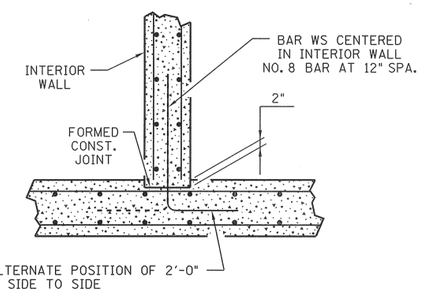


## JOINT DETAIL FOR INTERIOR WALL TO BOTTOM SLAB




## BAR WS

(NO. 8 BAR)

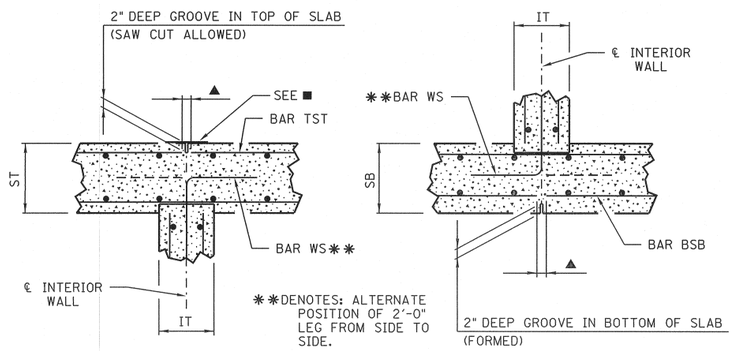


BOX OR SLAB BRIDGE

BOX BRIDGE

▲ BAR TST OR BAR BSB MUST BE DISCONTINUOUS AT THE GROOVE. THE GROOVE SHALL ALIGN WITH CENTER OF INTERIOR WALL. BAR TST OR BAR BSB SHALL BE CENTERED WITH RESPECT TO THE CELL WIDTH.

■ BUTYL RUBBER OR NEOPRENE STRIP 12 INCH WIDE BY ¼ INCH THICK SHALL COVER THE FULL LENGTH OF THE GROOVE IN THE TOP SLAB. STRIP MUST BE GLUED TO THE SLAB UTILIZING CONTACT CEMENT OVER 100% OF THE CONTACT AREA.

## MOMENT BREAK DETAIL FOR MULTIPLE BARREL BOX & SLAB BRIDGES

NOTE: MANDATORY FOR FILL HEIGHTS GREATER THAN 10 FEET.

✱ NOTE: THE EXCEPTION OCCURS WHEN TOP OR BOTTOM OF SLAB THICKNESS WILL NOT ALLOW 1'-0" PROJECTION. IN THOSE CASES, BARS WS MUST BE TIED TO TOP (TST) OR BOTTOM (BSB) MAT STEEL.

| | | | |
|---|---|---|---|
| DESIGNED BY | CMH / MAH | DATE | 12-09 |
| DRAWN BY | DIANE BUSH | DATE | 04-10 |
| SUPERVISED BY | RLH / JWP / MAH | DATE | 12-09 |
| CHECKED BY | | DATE | |

CONST. NO.

| PROJECT NO. | YEAR | SHEET NO. |
|---|---|---|
| | 2010 | |

REVISIONS

| NO. | DATE | BY | BRIEF DESCRIPTION |
|---|---|---|---|
| | | | |

## BOX DIMENSION DESIGNATIONS

THE BOX DIMENSION DESIGNATIONS IDENTIFY THE BOX ELEMENTS AS FOLLOWS:

SB = BOTTOM SLAB THICKNESS
ST = TOP SLAB THICKNESS
WT = EXTERIOR WALL THICKNESS
IT = INTERIOR WALL THICKNESS
BW = BOX WIDTH

## REINFORCING BAR DESIGNATIONS

THE REINFORCING BAR DESIGNATIONS IDENTIFY THE LOCATION AND PLACEMENT OF THE BARS AS FOLLOWS:

TST = TOP SLAB, TOP FACE
TSB = TOP SLAB, BOTTOM FACE
BST = BOTTOM SLAB, TOP FACE
BSB = BOTTOM SLAB, BOTTOM FACE
EWE = EXTERIOR WALL, EXTERIOR FACE
EWI = EXTERIOR WALL, INTERIOR FACE
IW = INTERIOR WALL, BOTH FACES
LNT = LONGITUDINAL BAR
LND = LONGITUDINAL DISTRIBUTION BAR, TOP SLAB, BOTTOM FACE
WS = CONNECTOR, WALL TO SLAB
WF = CONNECTOR, WALL TO FOOTING
EWF= EXTERIOR WALL FOOTING
IWF = INTERIOR WALL FOOTING

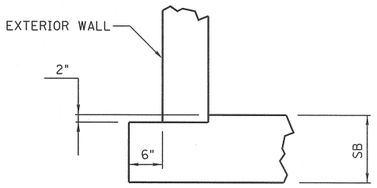


## ALTERNATE BOTTOM SLAB DETAIL

STATE OF TENNESSEE
DEPARTMENT OF TRANSPORTATION

TYPICAL SECTIONS AND DETAILS

STANDARD REINFORCED CONCRETE BRIDGE BOX AND SLAB TYPE

2010

CORRECT Edward P. Wasserman
ENGINEER OF STRUCTURES

STD-17-5

D:\dgn\std\std172.dgn
24-JUL-2010
12:41