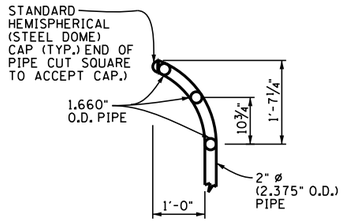

ANTI-CLIMB DETAIL

NOTE: WIRE MESH FABRIC TO BE STRETCHED FOR NO MORE THAN 100 FT. MAXIMUM.

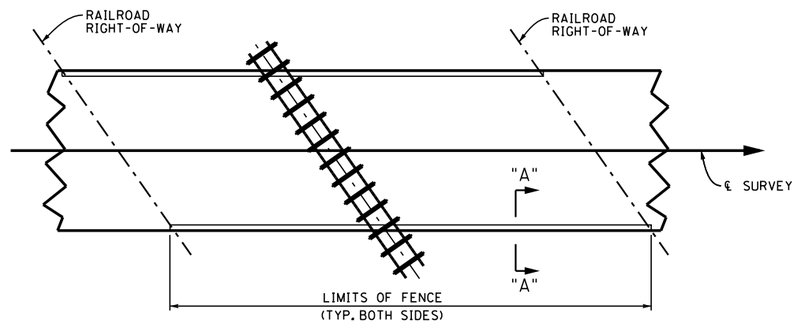

PLAN VIEW FENCE LOCATION

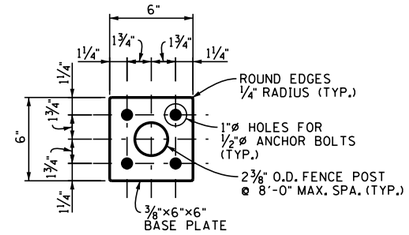

PLAN OF BASE PLATE

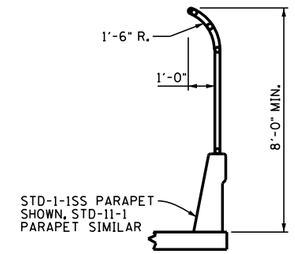

SECTION "A"-"A"

PROJECT NO.	YEAR	SHEET NO.
	2018	

REVISIONS

NO.	DATE	BY	BRIEF DESCRIPTION

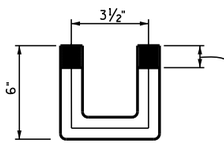

½"ø SQUARE BOND U-BOLT (A307) ℄ ANCHOR DETAIL

NOTE: TDOT APPROVED DRILLED AND EPOXY GROUTED ANCHORS WILL BE AN ACCEPTABLE ALTERNATE CONNECTION (REINFORCEMENT IN BRIDGE PARAPET SHALL BE PLACED TO PREVENT INTERFERENCE AND/OR DAMAGE TO THE REINFORCING STEEL DURING THE INSTALLATION OF THE ANCHORS). MECHANICAL ANCHORS ARE UNACCEPTABLE AND WILL NOT BE ALLOWED.

NOTE: THE CONTRACTOR HAS THE OPTION TO PAINT THE PROTECTIVE FENCE IN LIEU OF PVC COATING. THE PAINT SYSTEM SHALL BE SUBMITTED TO ENGINEER FOR APPROVAL.

PRE-COATED LONGITUDINAL RAILS, IF CUT, SHALL HAVE THE CUT END COATED WITH A TDOT APPROVED PVC TOUCH UP MATERIAL SUPPLIED BY THE MANUFACTURER PRIOR TO THE ERECTION.

ALL POSTS, BRACES, FITTINGS, AND HARDWARE SHALL BE PVC COATED, EXCEPT THAT NUTS, BOLTS, AND WASHERS SHALL ALSO BE PVC COATED OR PAINTED BY AN APPROVED SYSTEM AND TOUCHED UP AFTER INSTALLATION.

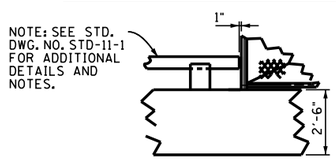

RAIL TERMINATOR DETAIL (STD-11-1 PARAPET)

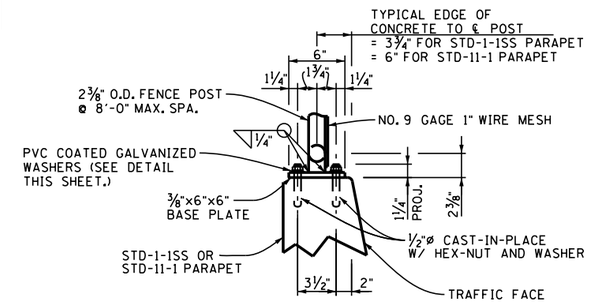

ELEVATION OF BASE PLATE

ALTERNATE PAINT SYSTEM REQUIREMENTS: GALVANIZED COMPONENTS SHALL BE SUBJECT TO A PRETREATMENT WASH UTILIZING ZINC PHOSPHATE. APPLY TWO COATS OF PAINT CONSISTING OF AN ELECTROSTATIC SPRAY APPLICATION OF A 2 MIL MINIMUM THICKNESS BASE COAT CONSISTING OF ZINC - RICH THERMO SETTING EPOXY FOLLOWED BY AN ELECTROSTATIC SPRAY APPLICATION OF A THERMO SETTING POLYESTER POWDER FINISH COAT OF 2 MIL MINIMUM THICKNESS.

NOTE: THE CONTRACTOR SHALL SUBMIT SHOP PLANS FOR THE FENCE AND ITS INSTALLATION PROCEDURE TO THE ENGINEER OF STRUCTURES FOR APPROVAL. FENCING IS TO BE BLACK PVC COATED GALVANIZED 1" DIAMOND MESH, CHAIN LINK FABRIC. THE FENCING SHALL BE NO. 9 GAGE, COMMERCIAL QUALITY, MEDIUM HIGH CARBON, HOT DIPPED GALVANIZED STEEL WIRE MEETING THE REQUIREMENTS OF ASTM F668-CURRENT EDITION. POSTS, RAILS, AND FRAMEWORK SHALL BE BLACK PVC COATED GALVANIZED STRUCTURAL STEEL OR SCHEDULE 40 PIPE. ALL MISCELLANEOUS CONNECTIONS, (BOLTS, WASHERS, AND NUTS, ETC.) FOR POSTS, RAILS, AND FRAMEWORK SHALL BE BLACK VINYL COATED GALVANIZED (OR PAINTED BY APPROVED SYSTEM). SEE ELEVATION OF BASE PLATE ON THIS SHEET.

POSTS AND RAILS SHALL BE PERMANENTLY POSITIONED BEFORE FABRIC IS PLACED. ALL LONGITUDINAL RAILS SHALL BE PARALLEL TO THE PARAPET. THE POSTS SHALL BE PERPENDICULAR TO THE TOP OF THE PARAPET.

SPECIFICATIONS: TENNESSEE DEPARTMENT OF TRANSPORTATION STANDARD SPECIFICATIONS FOR ROAD AND BRIDGE CONSTRUCTION (CURRENT EDITION).

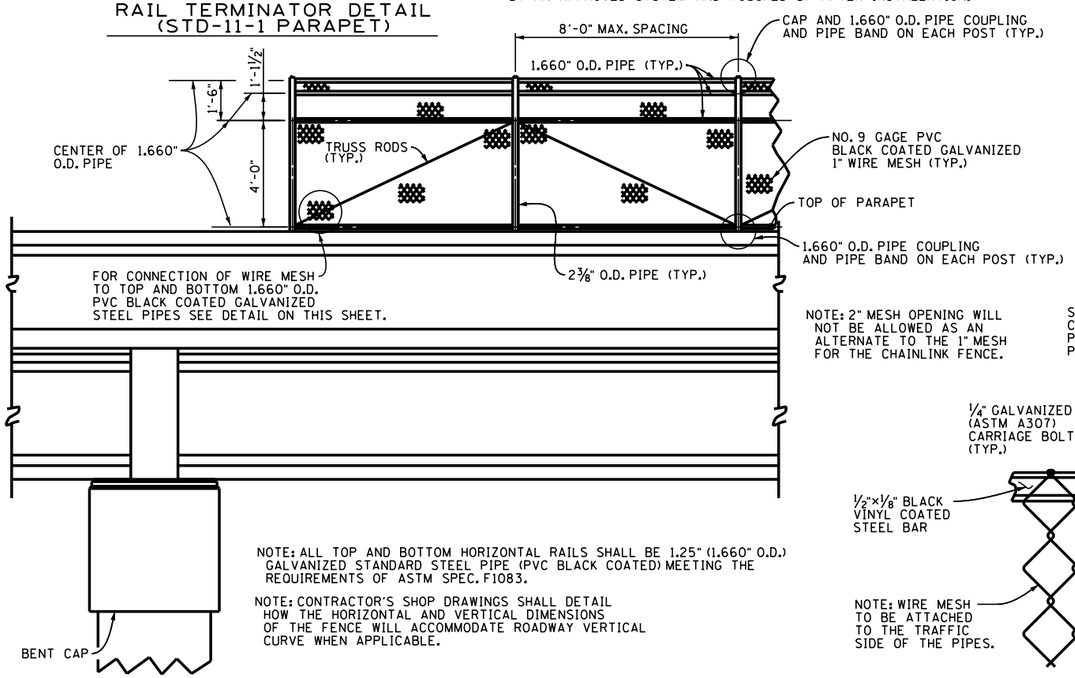

FENCE ELEVATION

NOTE: ALL TOP AND BOTTOM HORIZONTAL RAILS SHALL BE 1.25" (1.660" O.D.) GALVANIZED STANDARD STEEL PIPE (PVC BLACK COATED) MEETING THE REQUIREMENTS OF ASTM SPEC. F1083.

NOTE: CONTRACTOR'S SHOP DRAWINGS SHALL DETAIL HOW THE HORIZONTAL AND VERTICAL DIMENSIONS OF THE FENCE WILL ACCOMMODATE ROADWAY VERTICAL CURVE WHEN APPLICABLE.

NOTE: 2" MESH OPENING WILL NOT BE ALLOWED AS AN ALTERNATE TO THE 1" MESH FOR THE CHAINLINK FENCE.

THE CHAIN LINK FENCE SHALL BE TRUE IN LINE, TAUT, CLOSE FIT TO TOP OF PARAPET, WITH ½" MIN. TO 1" MAX. GAP AND SHALL COMPLY WITH THE BEST PRACTICE FOR FENCE CONSTRUCTION OF THIS TYPE.

ALL POSTS SHALL BE SET PLUMB, NOT PERPENDICULAR TO THE SLAB.

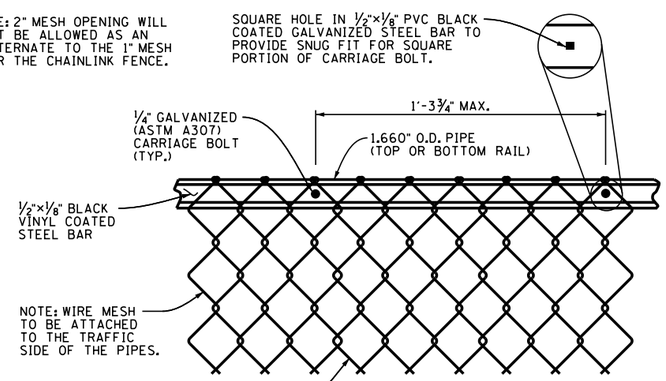

ELEVATION

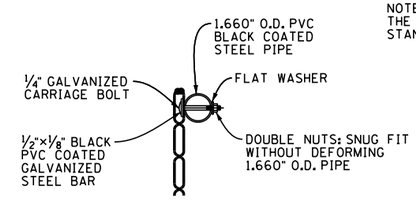

END ELEVATION

MESH CONNECTION DETAILS

NOTE: SHOWING ATTACHMENT OF WIRE MESH TO TOP AND BOTTOM 1.660" O.D. BLACK PVC COATED GALVANIZED STEEL PIPE.

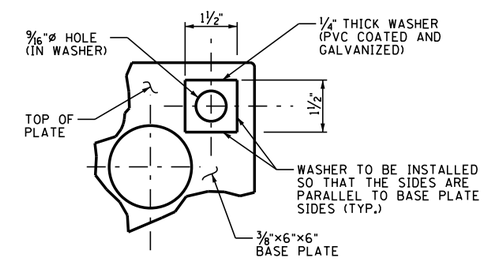

WASHER DETAIL

NOTE: THE PRICE BID FOR ITEM NO. 707-07.01 SHALL INCLUDE ALL LABOR, EQUIPMENT AND MATERIALS NECESSARY FOR THE COMPLETE INSTALLATION OF THE PROTECTIVE FENCE AND SHALL INCLUDE ALL FITTINGS, BASE PLATES AND U-BOLTS, HEX NUTS AND WASHERS, ANTI-CLIMB SHIELDS, CHAIN LINK FENCE, POSTS, TRUSS RODS, COUPLINGS, AND ANY OTHER MATERIAL REQUIRED FOR INSTALLATION.

NOTE: DETAILED SHOP DRAWINGS SHALL BE SUBMITTED TO THE ENGINEER FOR APPROVAL PER SECTION 105.02 OF THE STANDARD SPECIFICATIONS.

STATE OF TENNESSEE
DEPARTMENT OF TRANSPORTATION

STANDARD PROTECTIVE FENCE DETAILS 2018

DESIGNED BY	A. PRICE	DATE	3-18
DRAWN BY	K. MARTINKO	DATE	3-18
SUPERVISED BY	H. WALKER	DATE	3-18
CHECKED BY	A. PRICE	DATE	3-18

CORRECT Ted A Kniazewycz
ENGINEER OF STRUCTURES

STD-8-5